SYSTEM WIRING DIAGRAMS
Cooling Fan Circuit, A/T
1991 Mitsubishi Galant
For x
Copyright © 1998 Mitchell Repair Information Company, LLC
Wednesday, September 29, 2004 12:00PM

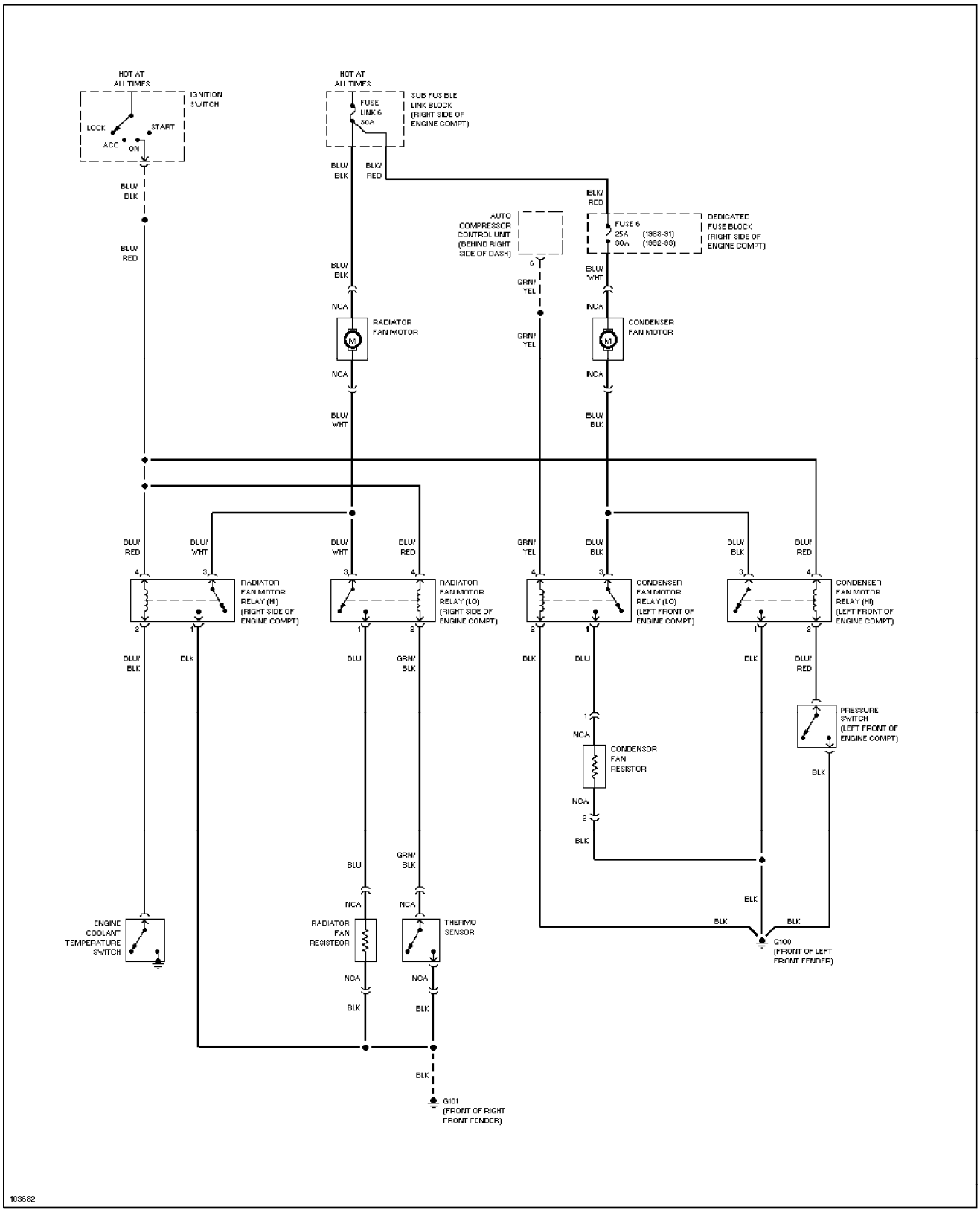

SYSTEM WIRING DIAGRAMS
Cooling Fan Circuit, M/T (p. 2)
1991 Mitsubishi Galant
For x
Copyright © 1998 Mitchell Repair Information Company, LLC
Wednesday, September 29, 2004 12:00PM

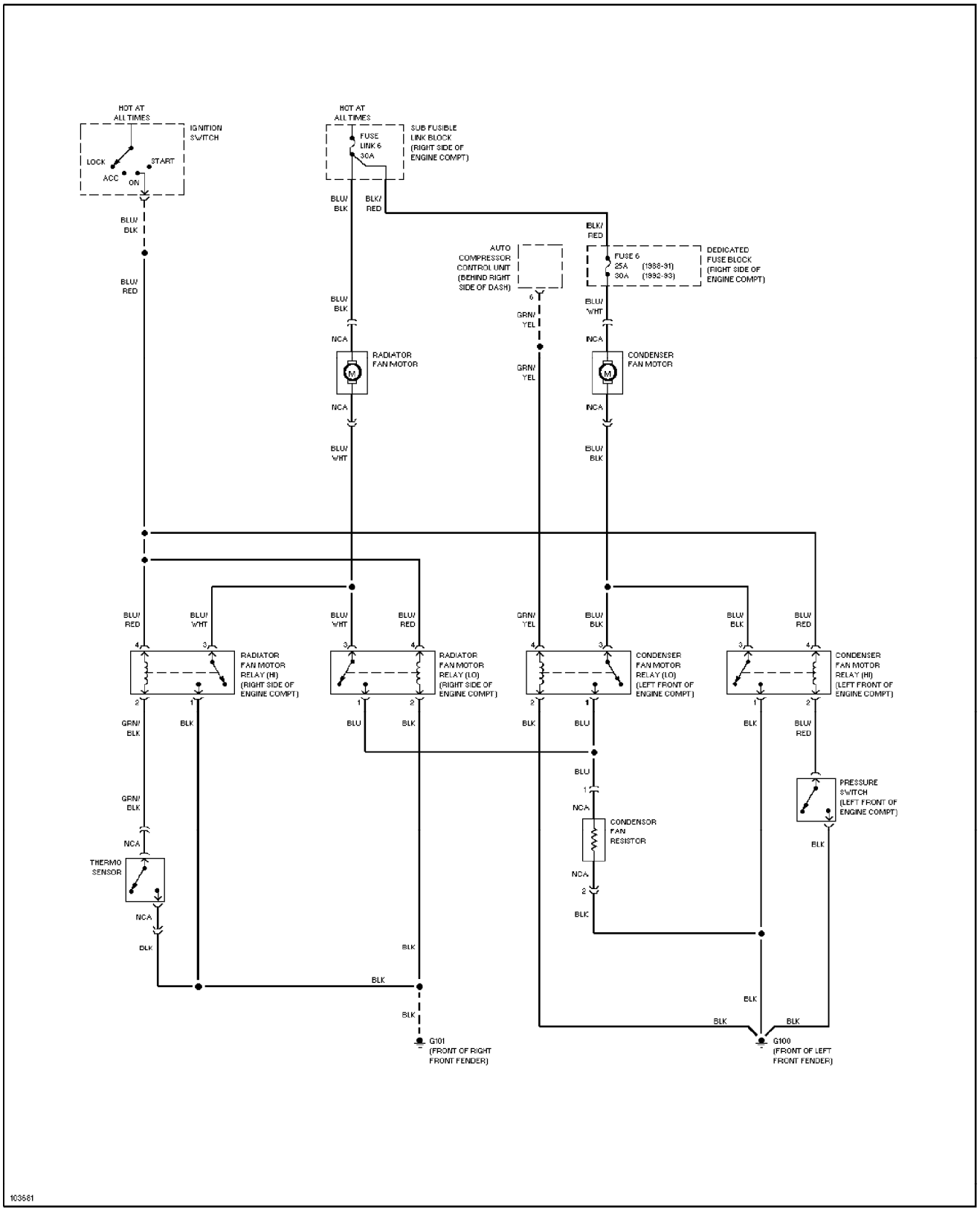

SYSTEM WIRING DIAGRAMS
Defogger Circuit (p. 3)
1991 Mitsubishi Galant
For x
Copyright © 1998 Mitchell Repair Information Company, LLC
Wednesday, September 29, 2004 12:00PM

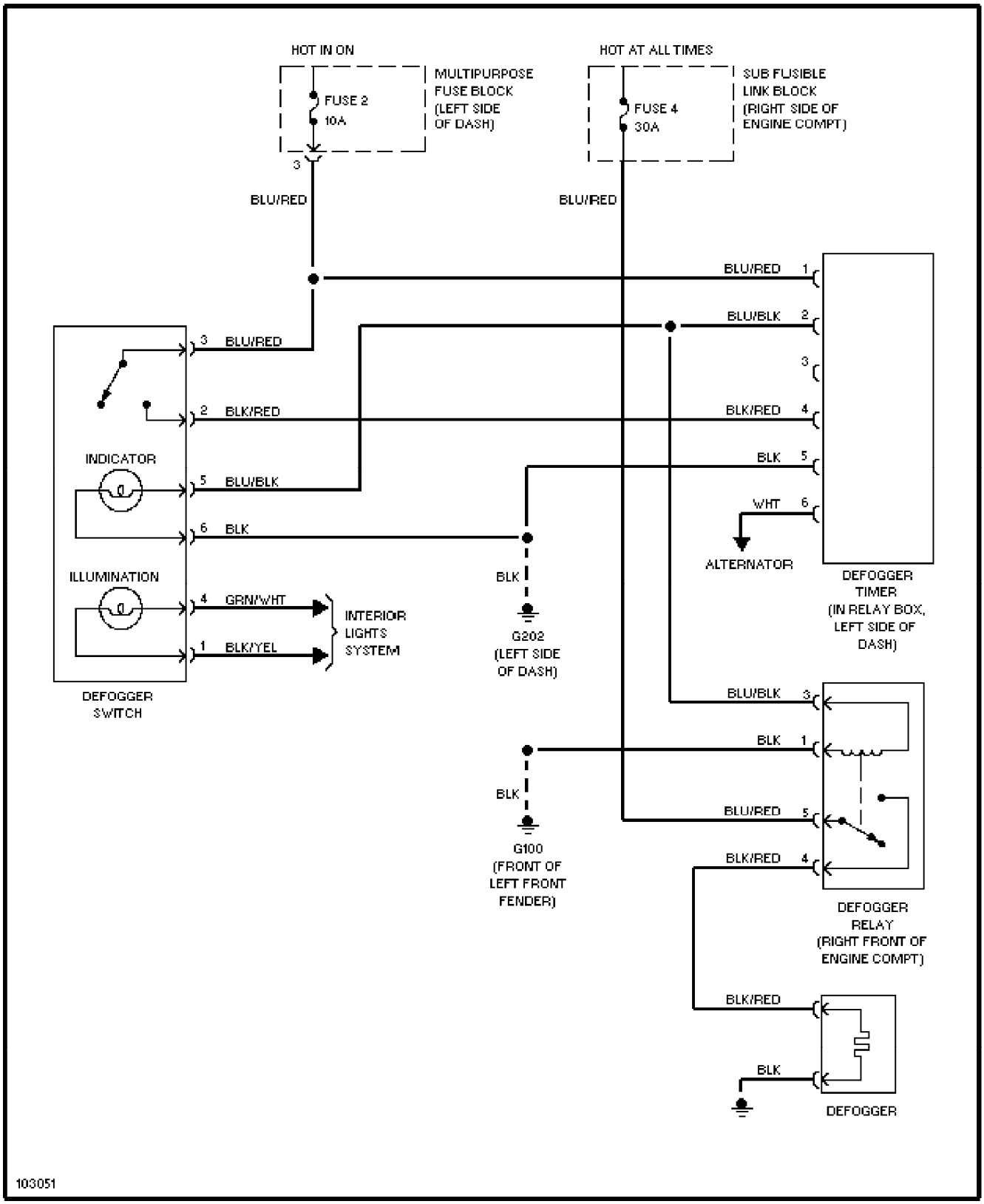

SYSTEM WIRING DIAGRAMS
Horn Circuit (p. 4)
1991 Mitsubishi Galant
For x
Copyright © 1998 Mitchell Repair Information Company, LLC
Wednesday, September 29, 2004 12:00PM

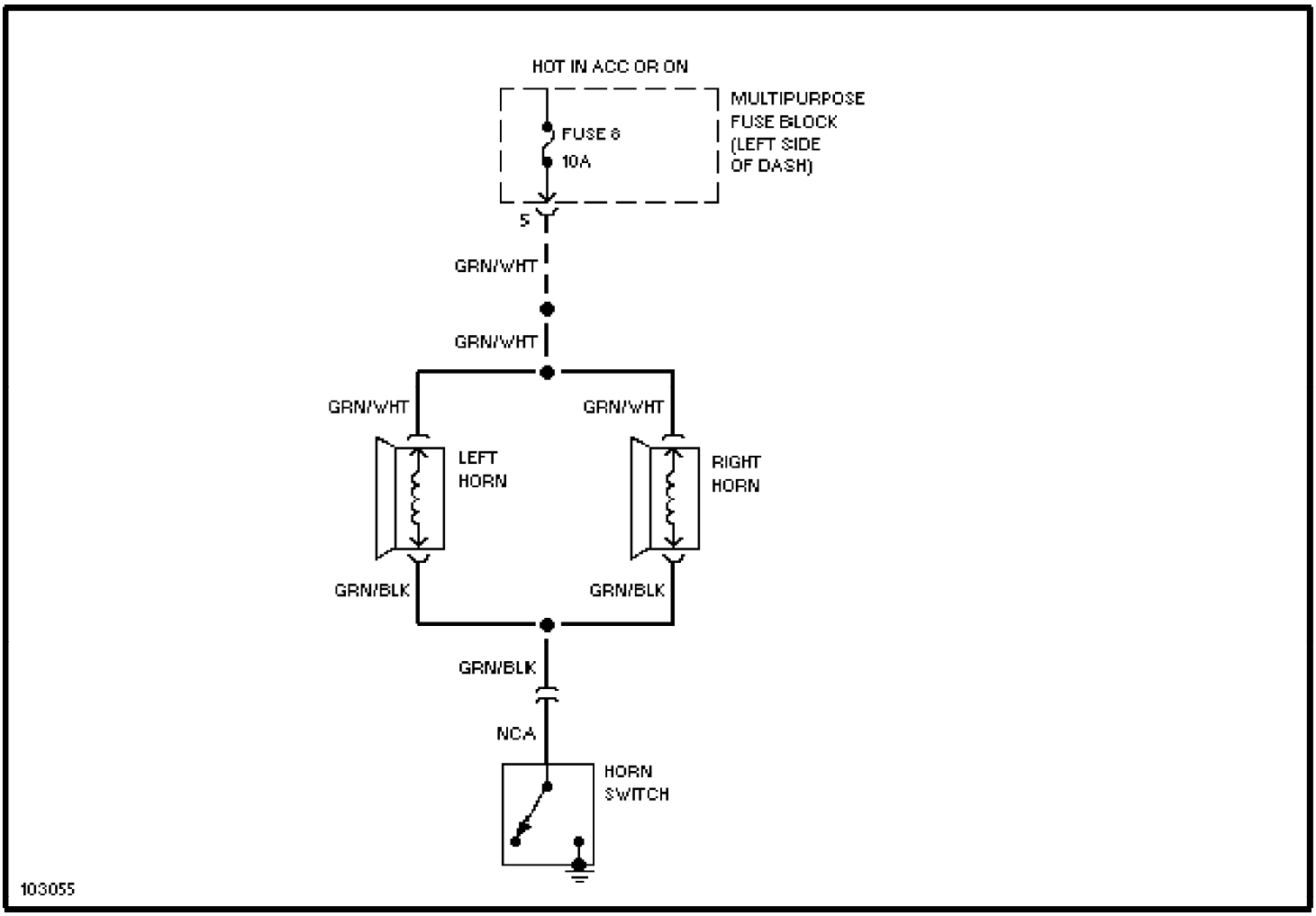

SYSTEM WIRING DIAGRAMS
Power Antenna Circuit (p. 5)
1991 Mitsubishi Galant
For x
Copyright © 1998 Mitchell Repair Information Company, LLC
Wednesday, September 29, 2004 12:00PM

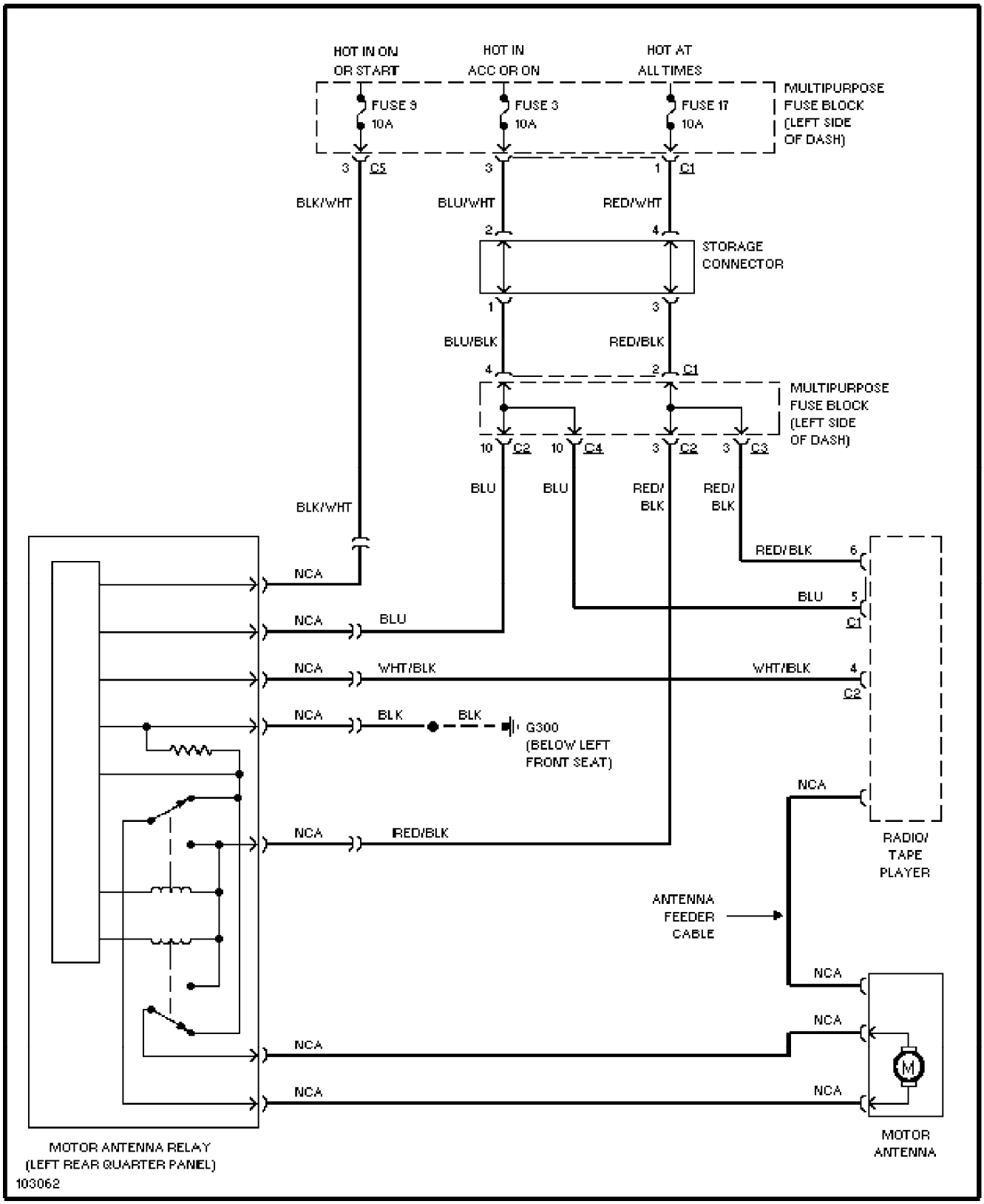

SYSTEM WIRING DIAGRAMS
2.0L Turbo, Power Door Lock Circuit, W/ ETACS Unit (p. 6)
1991 Mitsubishi Galant
For x
Copyright © 1998 Mitchell Repair Information Company, LLC
Wednesday, September 29, 2004 12:00PM

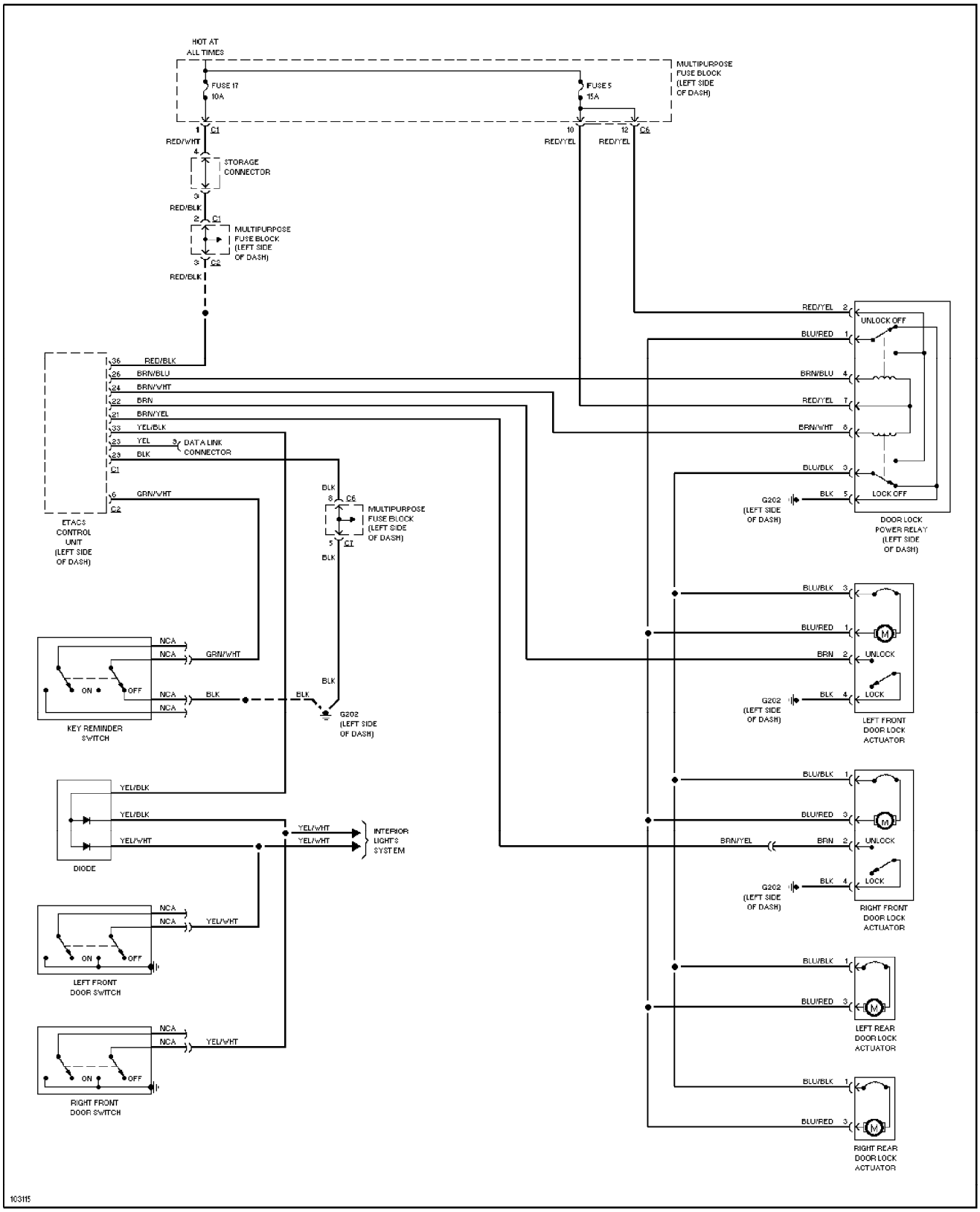

SYSTEM WIRING DIAGRAMS
2.0L Turbo, Power Door Lock Circuit, W/O ETACS Unit (p. 7)
1991 Mitsubishi Galant
For x
Copyright © 1998 Mitchell Repair Information Company, LLC
Wednesday, September 29, 2004 12:00PM

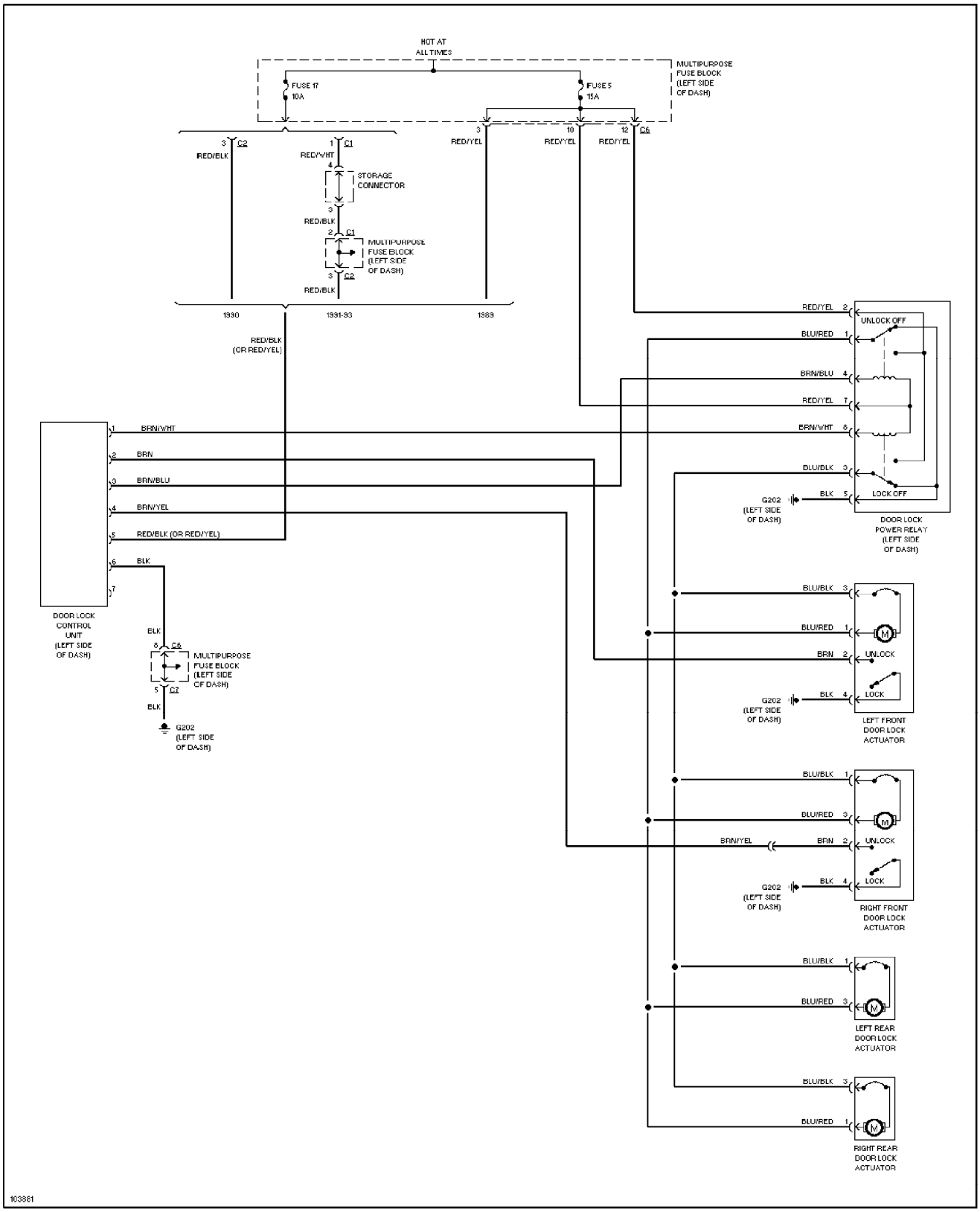

SYSTEM WIRING DIAGRAMS
2.0L, Power Door Lock Circuit, W/ ETACS Unit (p. 8)
1991 Mitsubishi Galant
For x
Copyright © 1998 Mitchell Repair Information Company, LLC
Wednesday, September 29, 2004 12:00PM

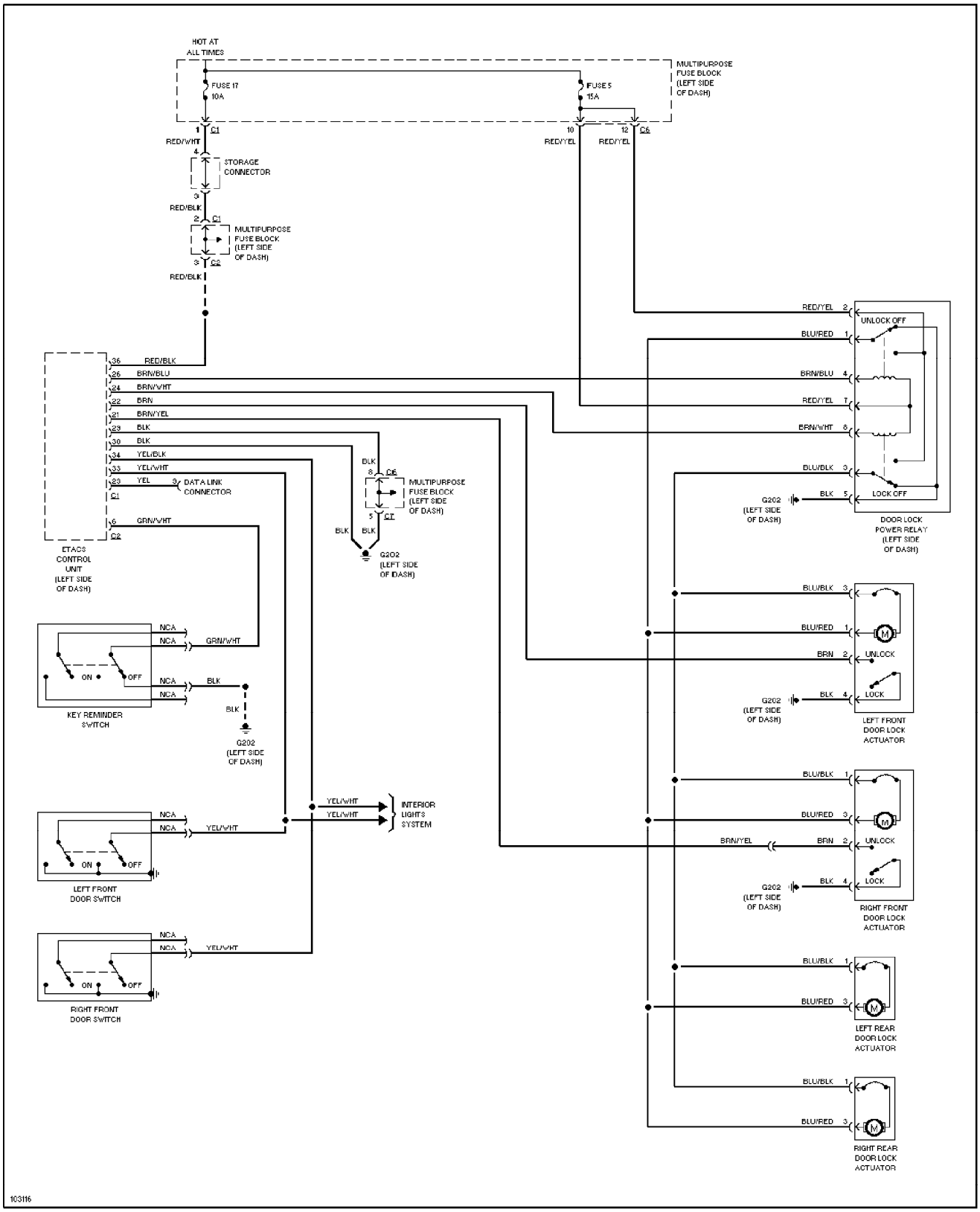

SYSTEM WIRING DIAGRAMS
2.0L, Power Door Lock Circuit, W/O ETACS Unit (p. 9)

1991 Mitsubishi Galant

For x

Copyright © 1998 Mitchell Repair Information Company, LLC

Wednesday, September 29, 2004 12:00PM

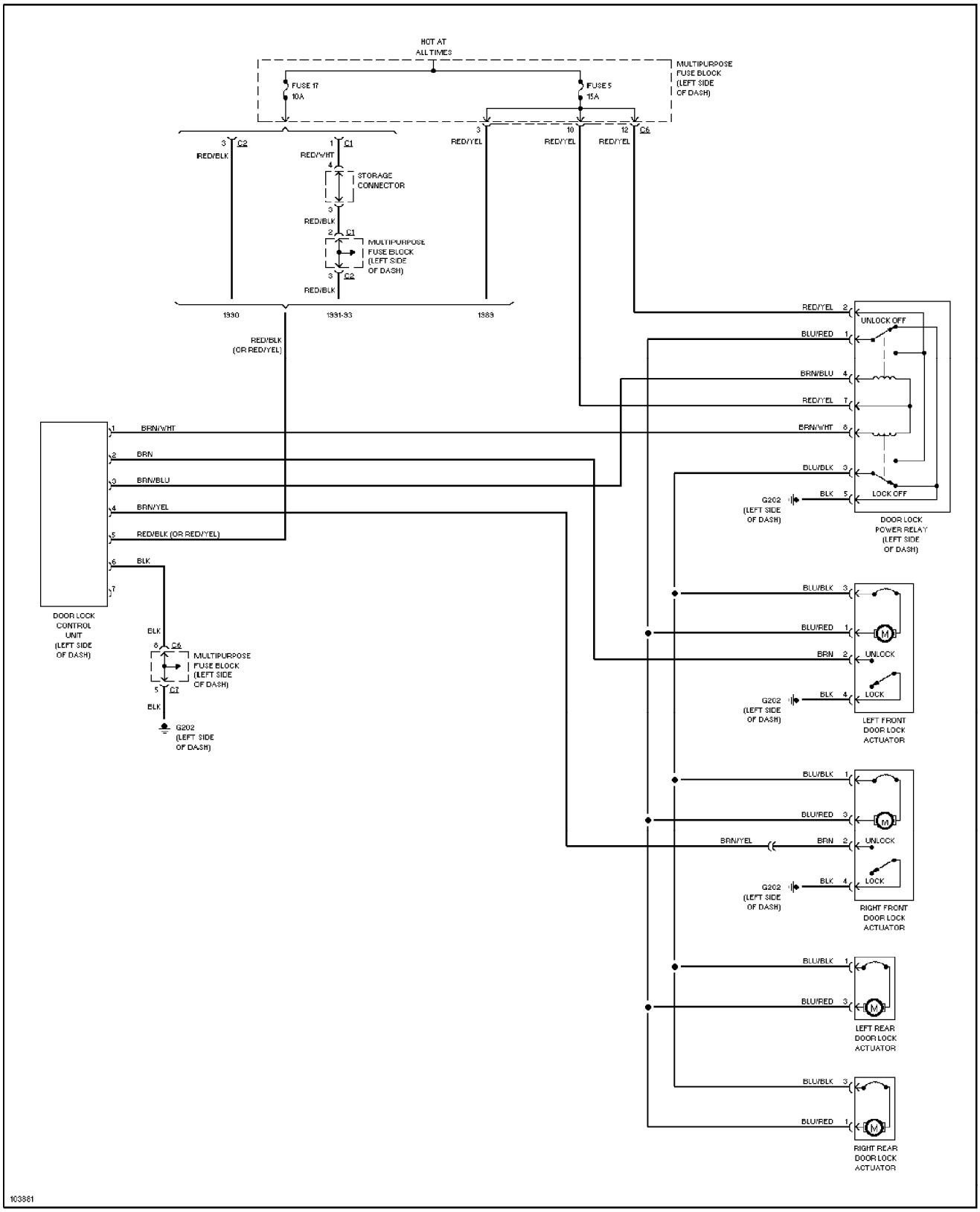

SYSTEM WIRING DIAGRAMS
Power Mirror Circuit (p. 10)
1991 Mitsubishi Galant
For x
Copyright © 1998 Mitchell Repair Information Company, LLC
Wednesday, September 29, 2004 12:00PM

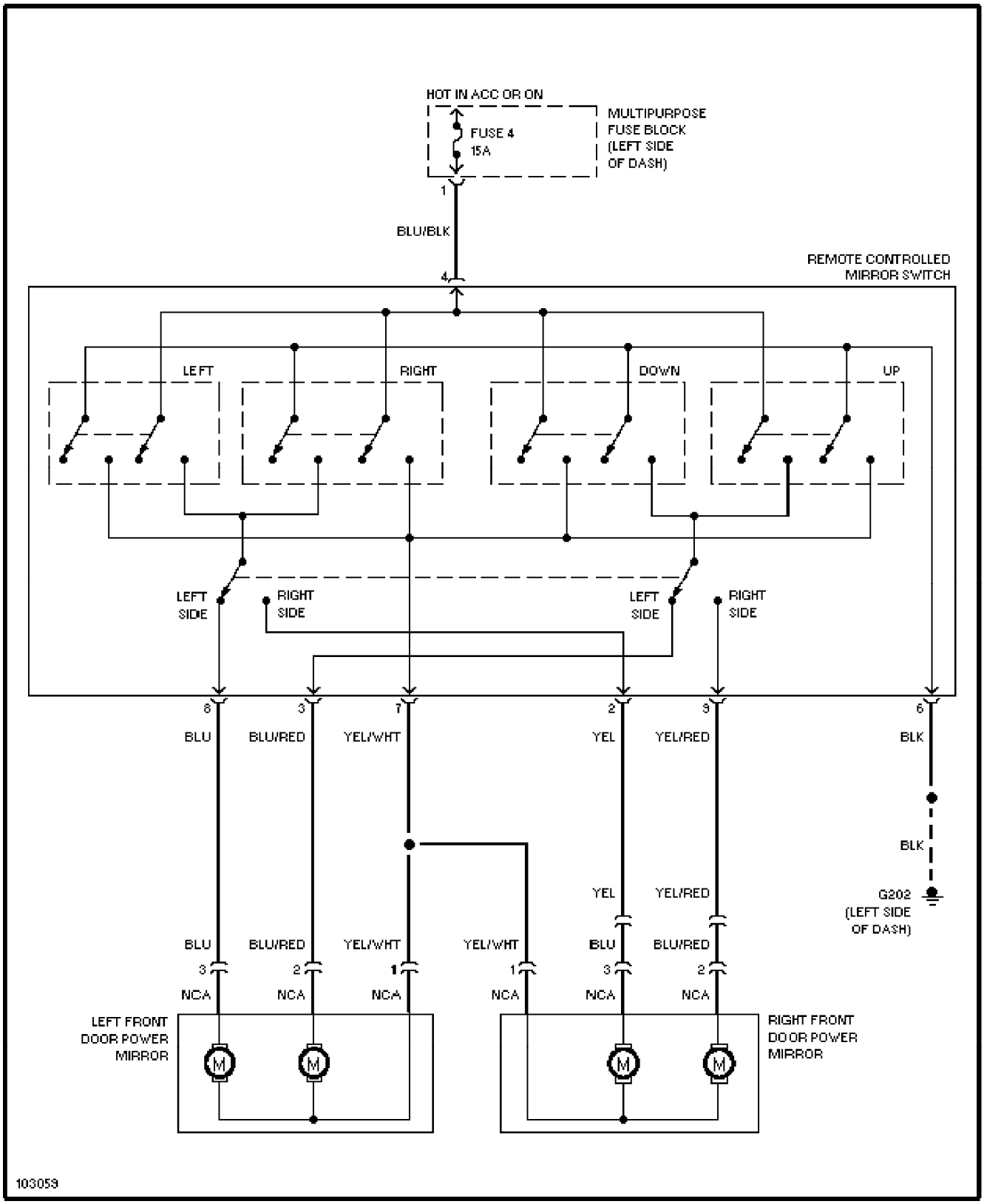

SYSTEM WIRING DIAGRAMS
2.0L Turbo, Power Window Circuit, W/ ETACS Unit (p. 11)
1991 Mitsubishi Galant
For x
Copyright © 1998 Mitchell Repair Information Company, LLC
Wednesday, September 29, 2004 12:00PM

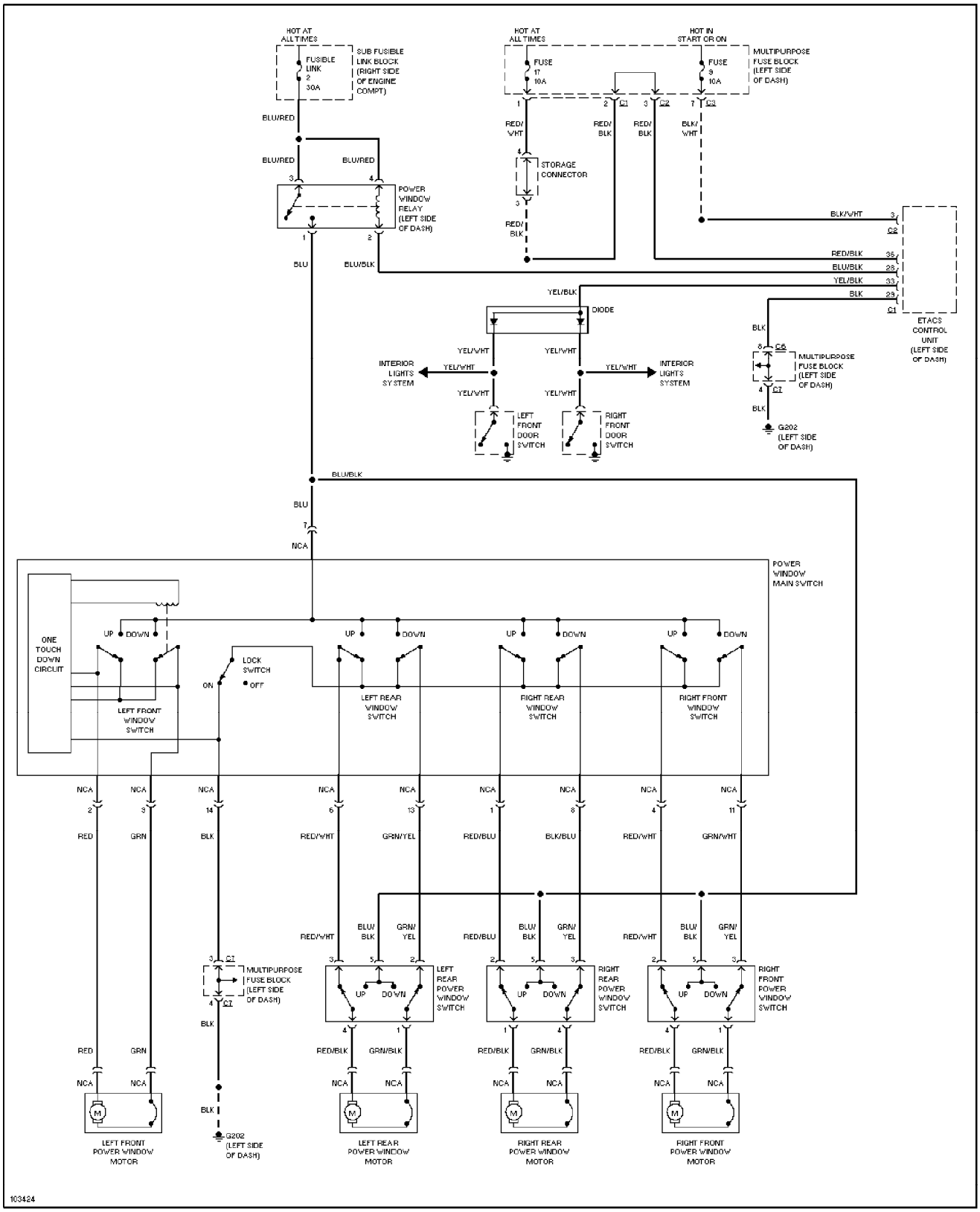

SYSTEM WIRING DIAGRAMS
2.0L Turbo, Power Window Circuit, W/O ETACS Unit (p. 12)
1991 Mitsubishi Galant
For x
Copyright © 1998 Mitchell Repair Information Company, LLC
Wednesday, September 29, 2004 12:00PM

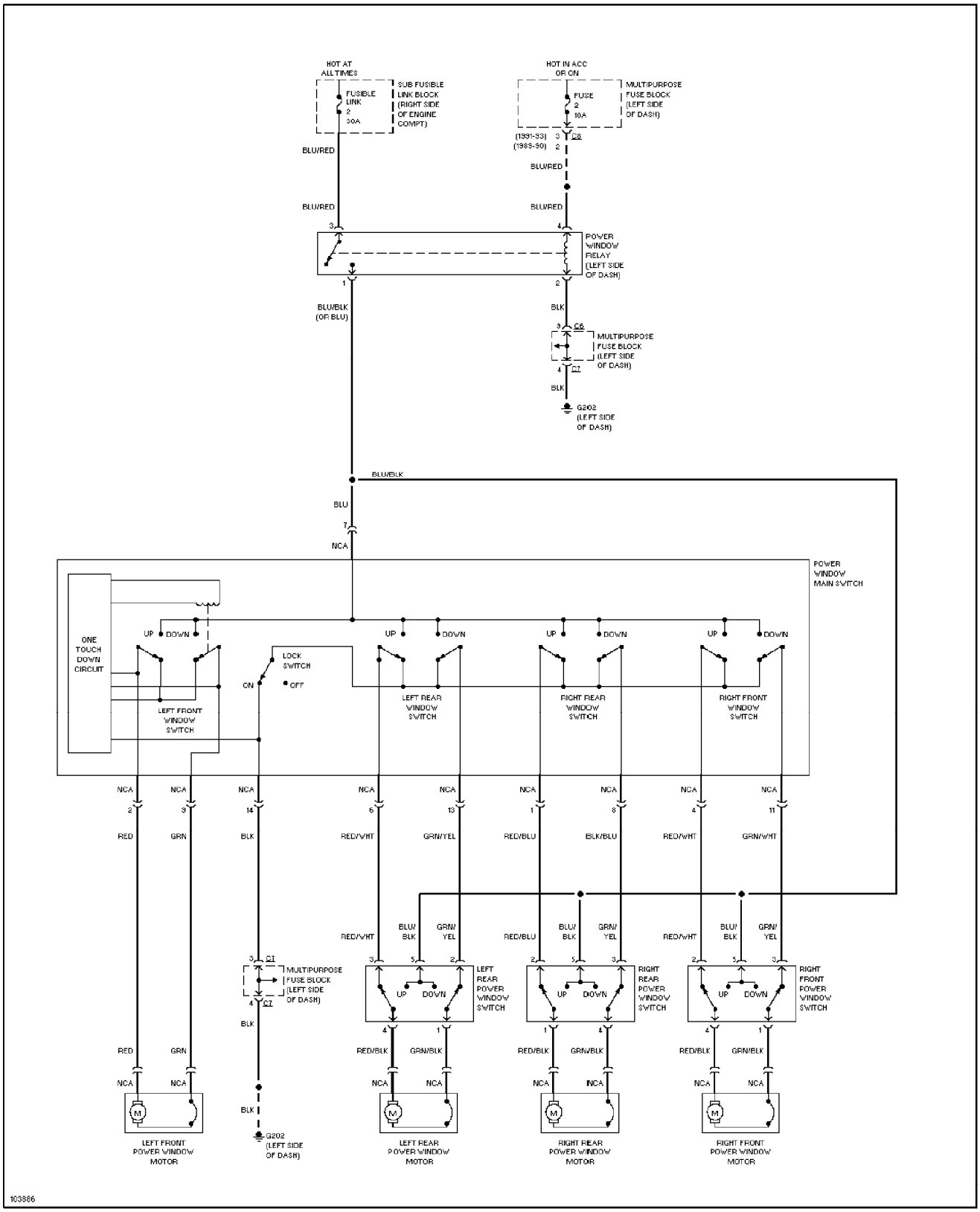

SYSTEM WIRING DIAGRAMS
2.0L, Power Window Circuit, W/ ETACS Unit (p. 13)

1991 Mitsubishi Galant

For x

Copyright © 1998 Mitchell Repair Information Company, LLC

Wednesday, September 29, 2004 12:00PM

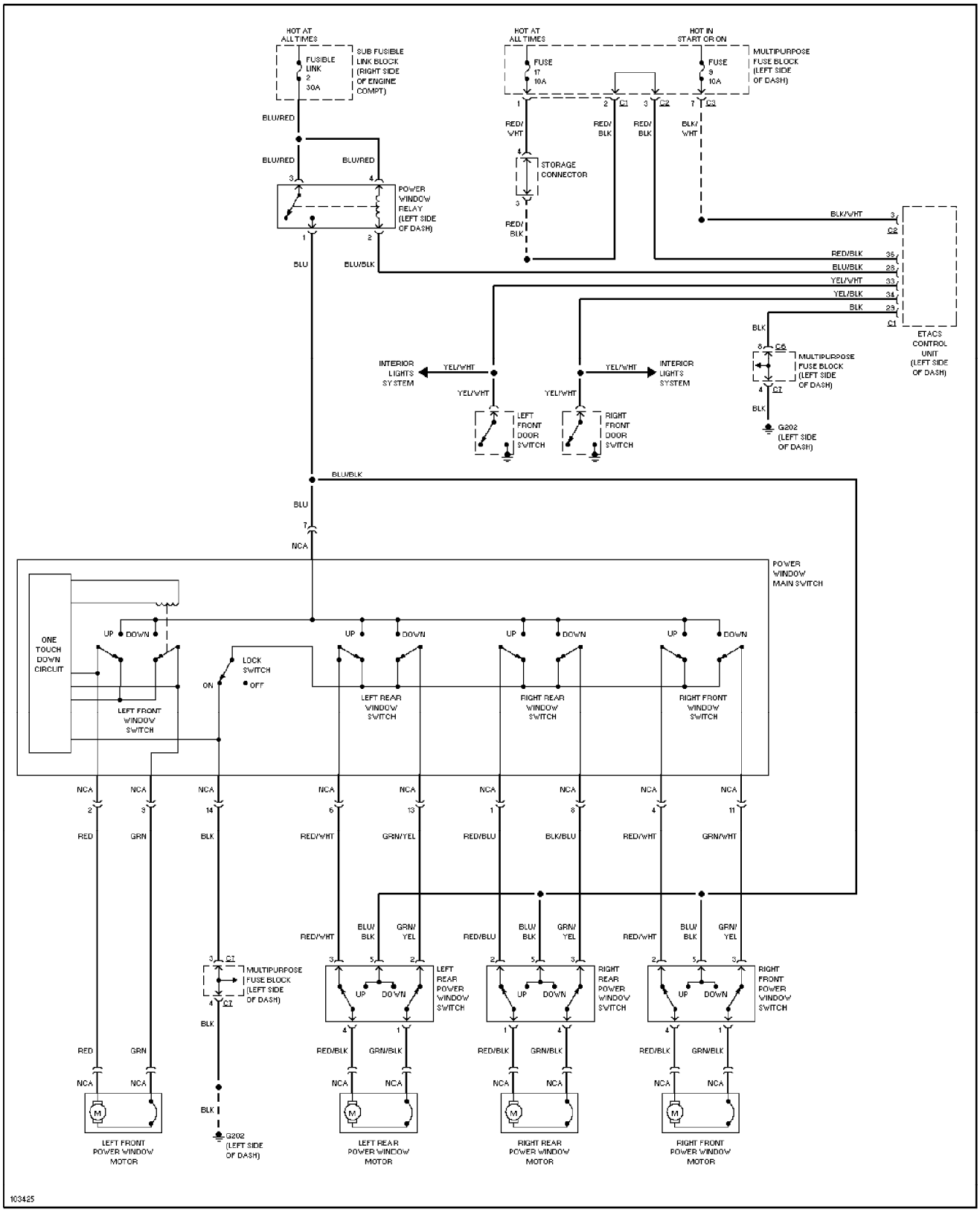

SYSTEM WIRING DIAGRAMS
2.0L, Power Window Circuit, W/O ETACS Unit (p. 14)
1991 Mitsubishi Galant
For x
Copyright © 1998 Mitchell Repair Information Company, LLC
Wednesday, September 29, 2004 12:00PM

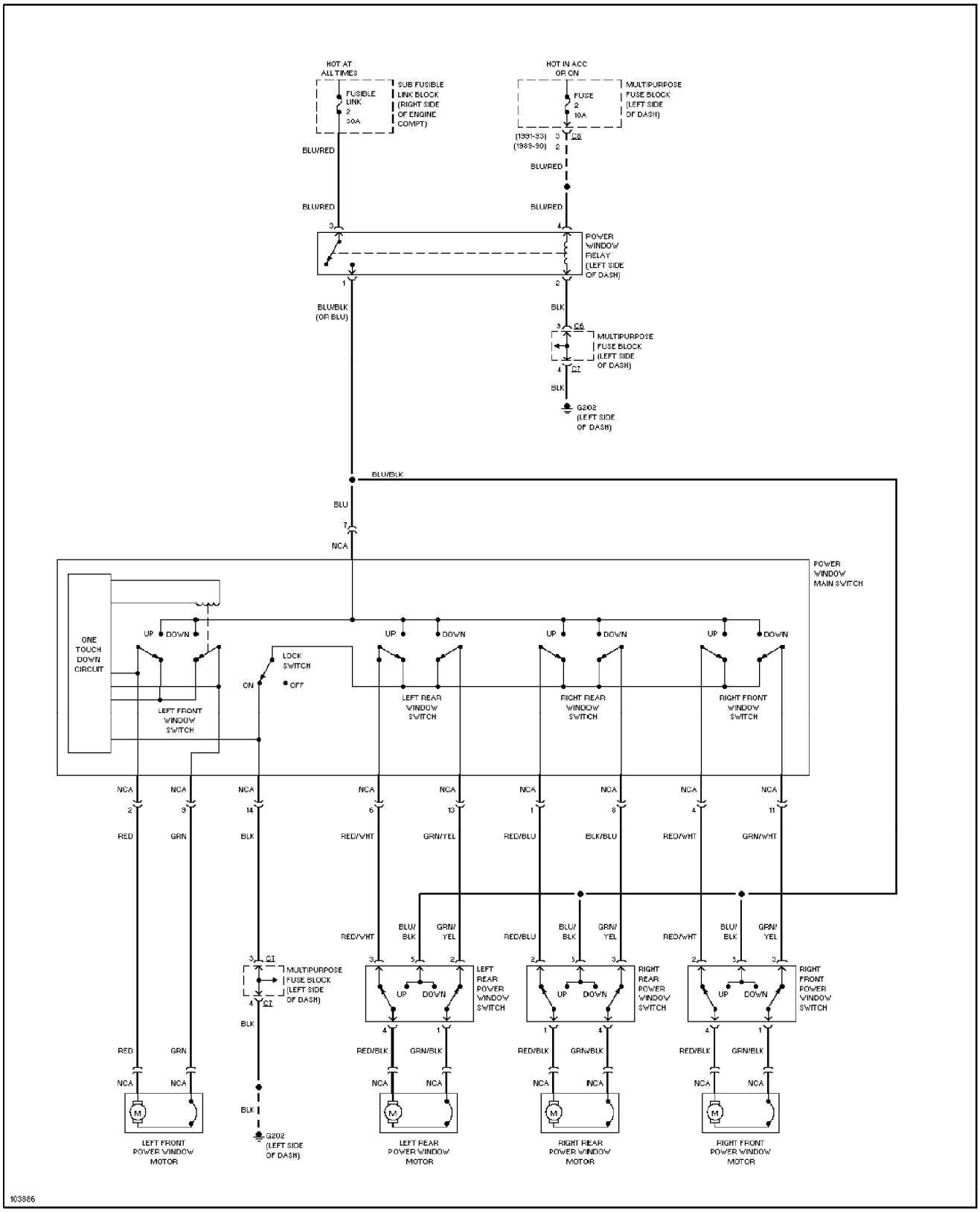

SYSTEM WIRING DIAGRAMS
Radio Circuits, W/ CD Changer (p. 15)
1991 Mitsubishi Galant
For x
Copyright © 1998 Mitchell Repair Information Company, LLC
Wednesday, September 29, 2004 12:00PM

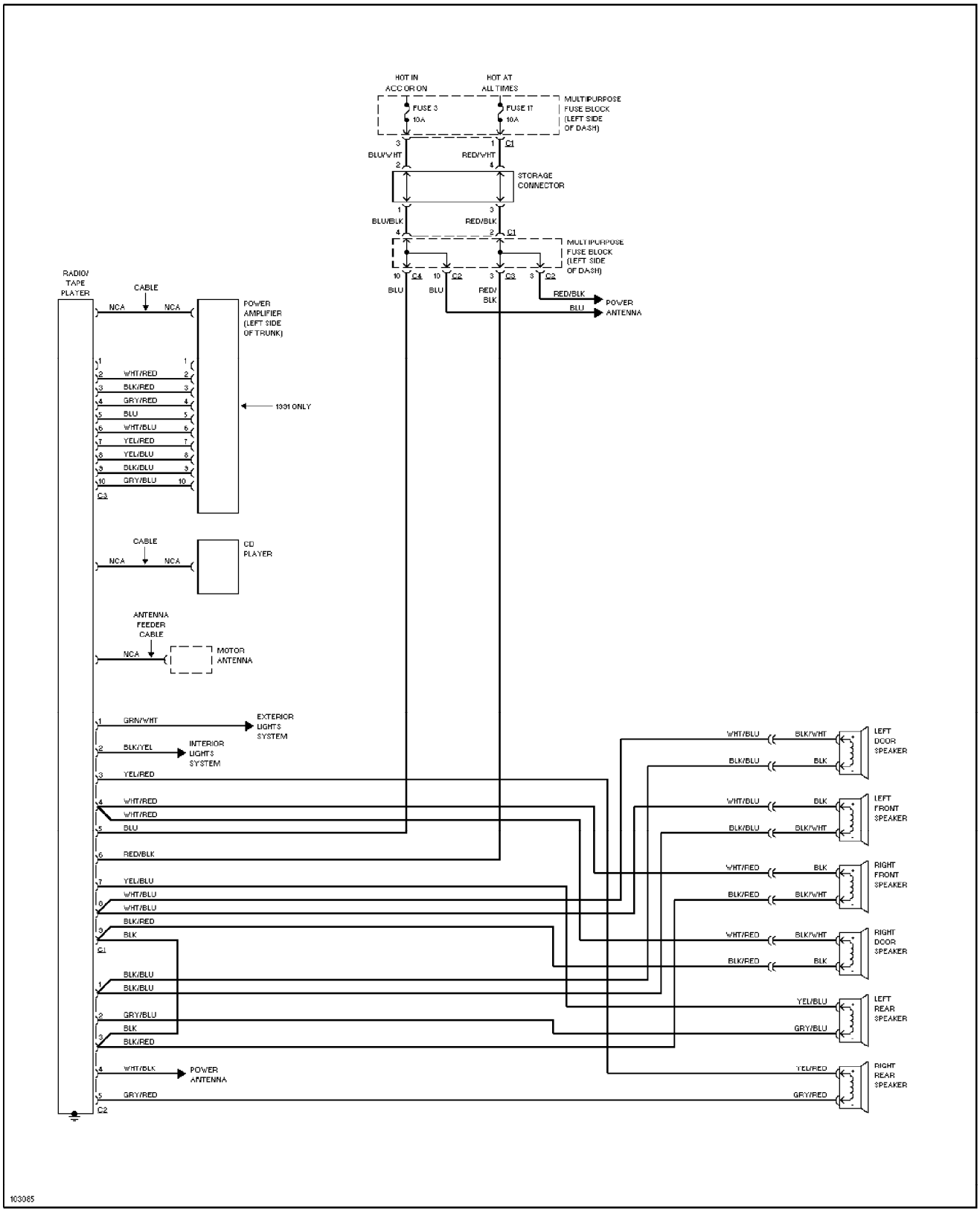

SYSTEM WIRING DIAGRAMS
Radio Circuits, W/O CD Changer (p. 16)
1991 Mitsubishi Galant
For x
Copyright © 1998 Mitchell Repair Information Company, LLC
Wednesday, September 29, 2004 12:00PM

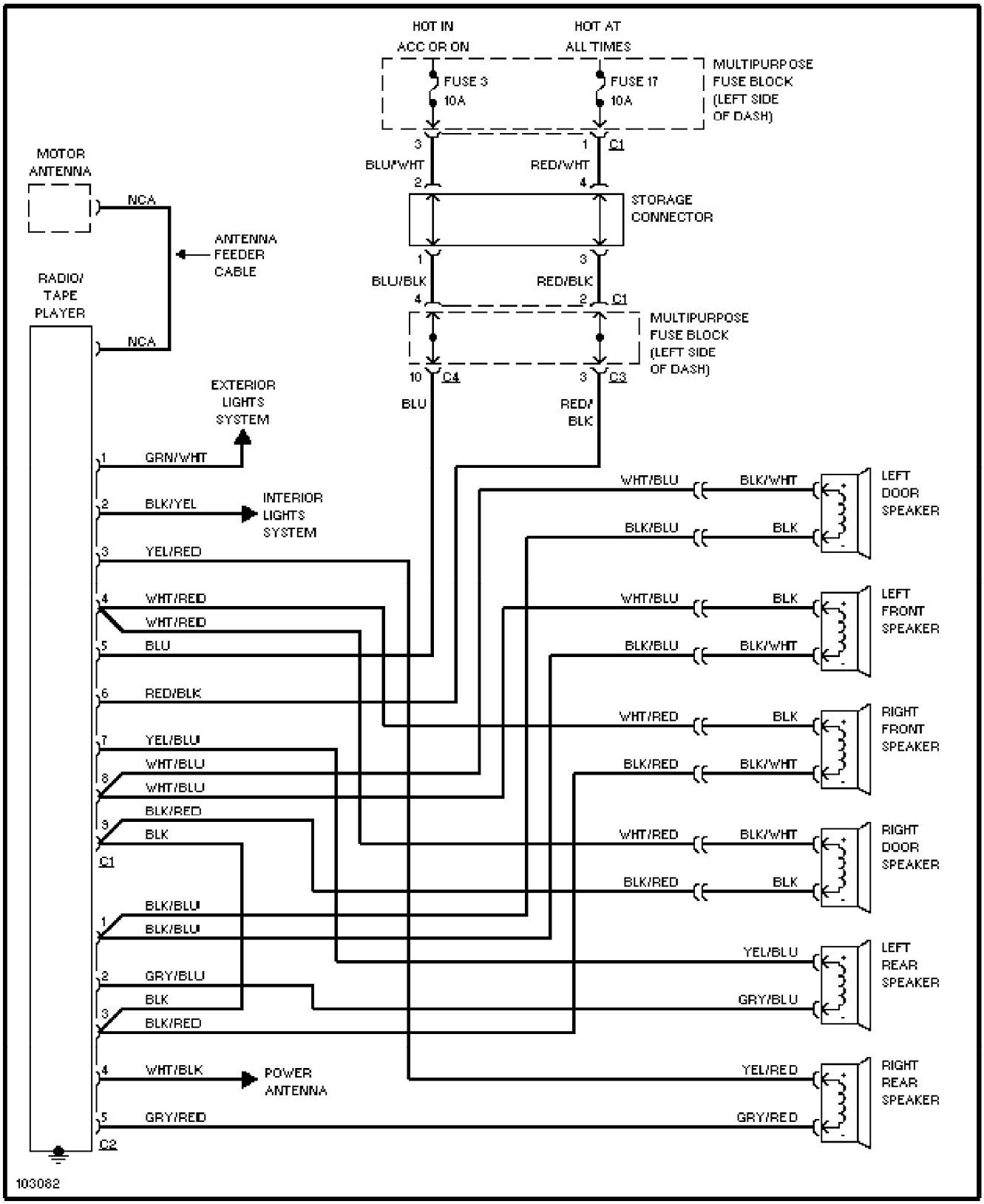

SYSTEM WIRING DIAGRAMS
Charging Circuit (p. 17)
1991 Mitsubishi Galant
For x
Copyright © 1998 Mitchell Repair Information Company, LLC
Wednesday, September 29, 2004 12:00PM

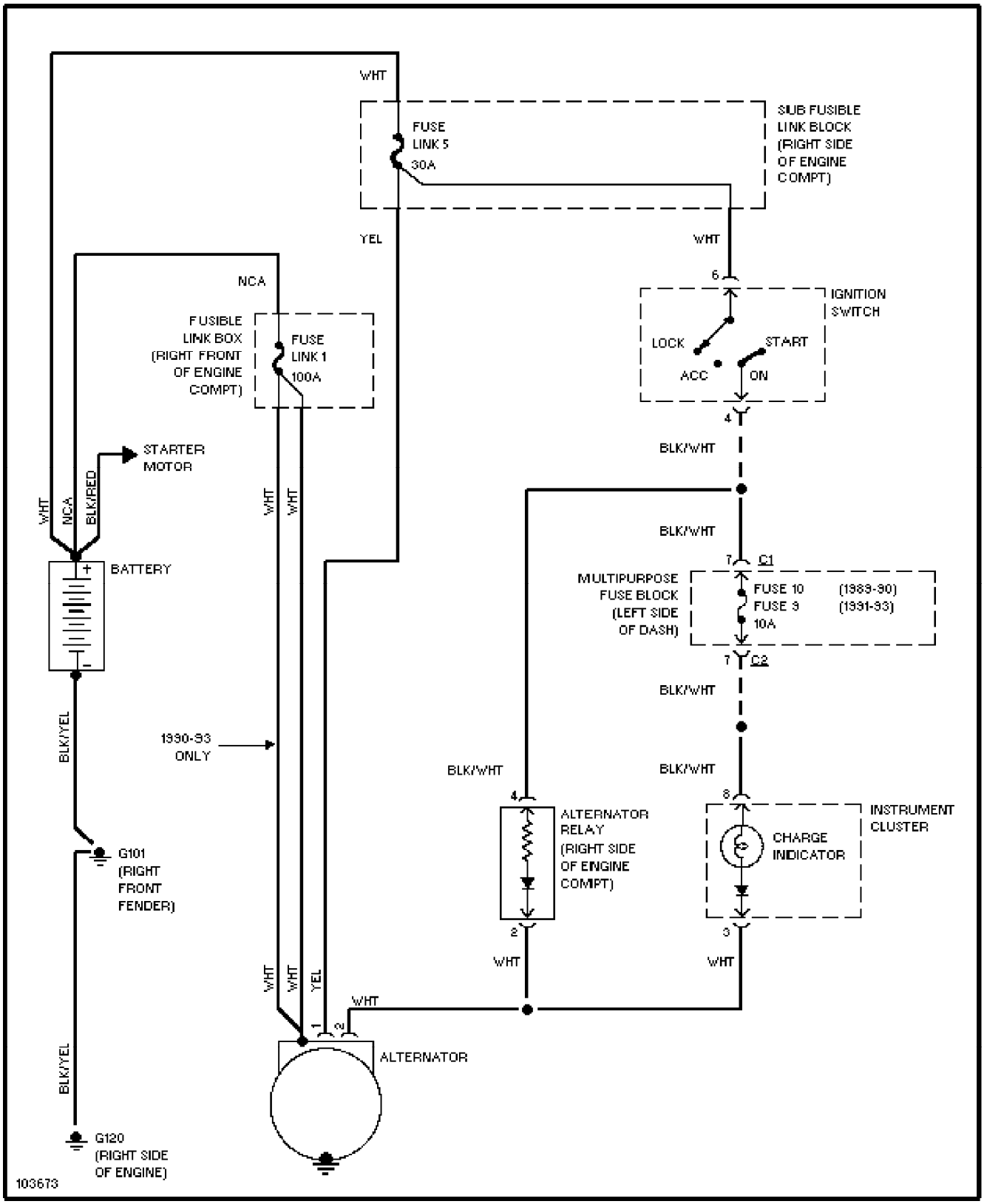

SYSTEM WIRING DIAGRAMS
Starting Circuit, W/ Theft Deterrent (p. 18)
1991 Mitsubishi Galant
For x
Copyright © 1998 Mitchell Repair Information Company, LLC
Wednesday, September 29, 2004 12:00PM

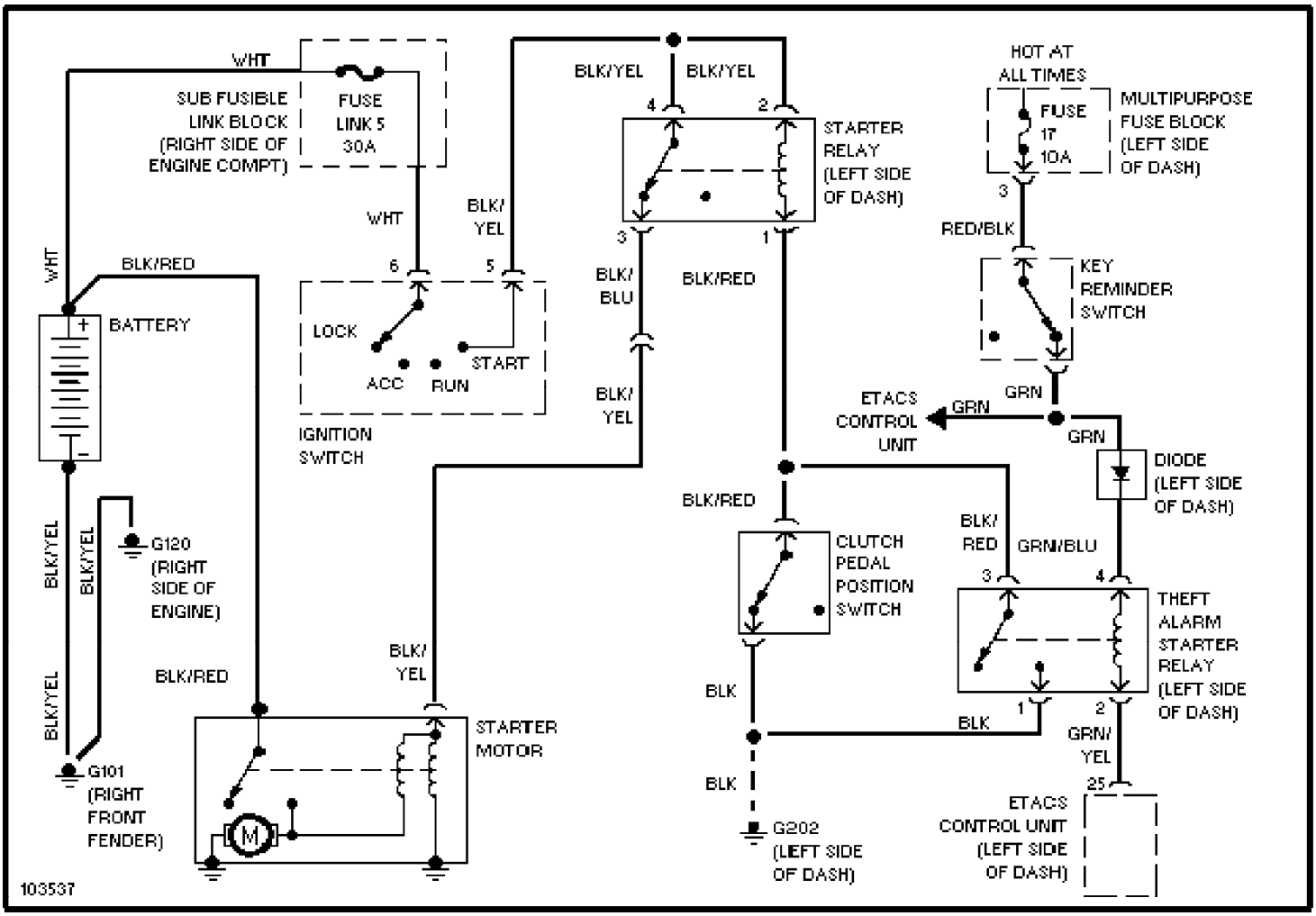

SYSTEM WIRING DIAGRAMS
Starting Circuit, W/O Theft Deterrent (p. 19)
1991 Mitsubishi Galant
For x
Copyright © 1998 Mitchell Repair Information Company, LLC
Wednesday, September 29, 2004 12:00PM

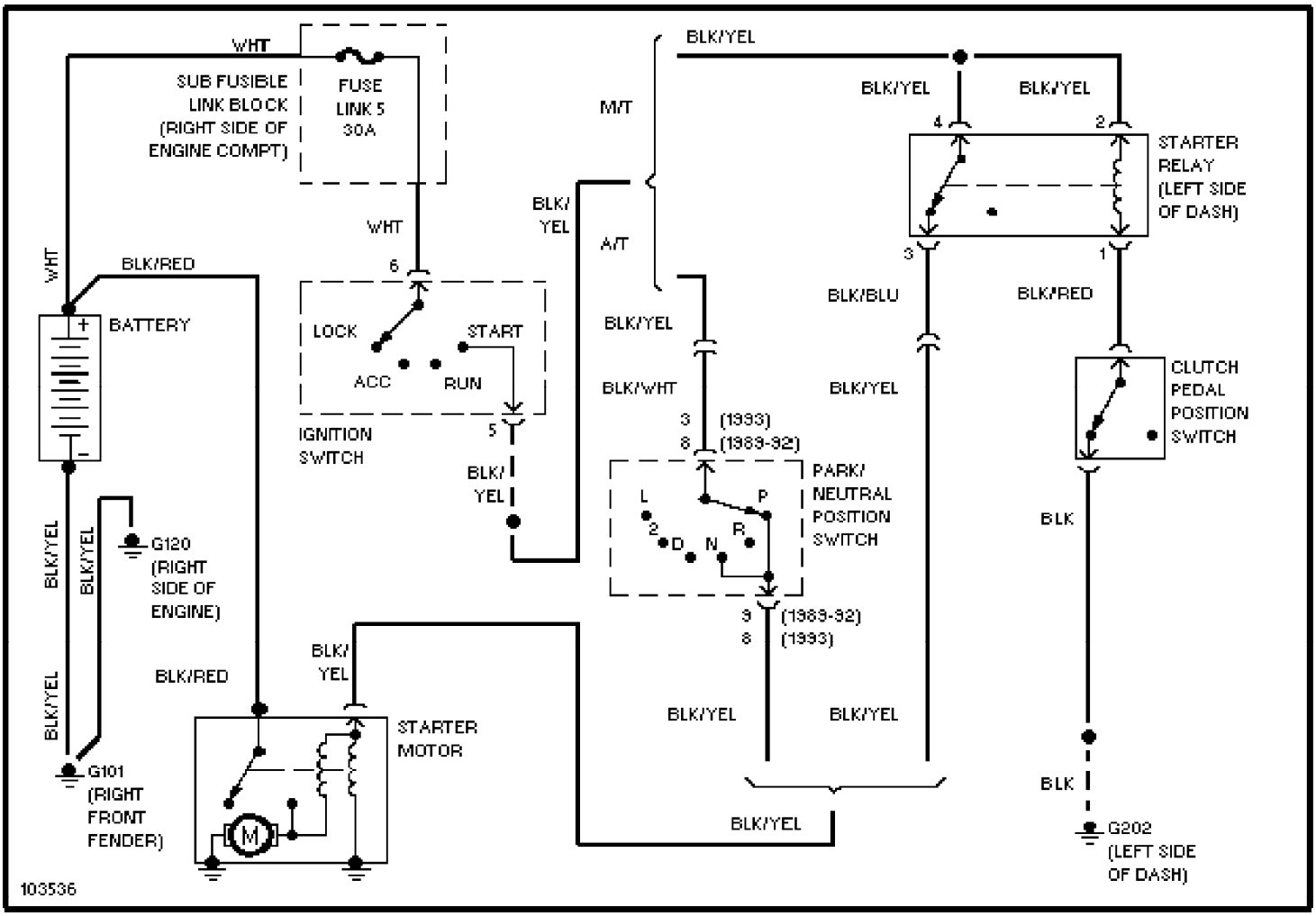

SYSTEM WIRING DIAGRAMS
Wiper/Washer Circuit, W/ ETACS UNIT (p. 20)
1991 Mitsubishi Galant
For x
Copyright © 1998 Mitchell Repair Information Company, LLC
Wednesday, September 29, 2004 12:00PM

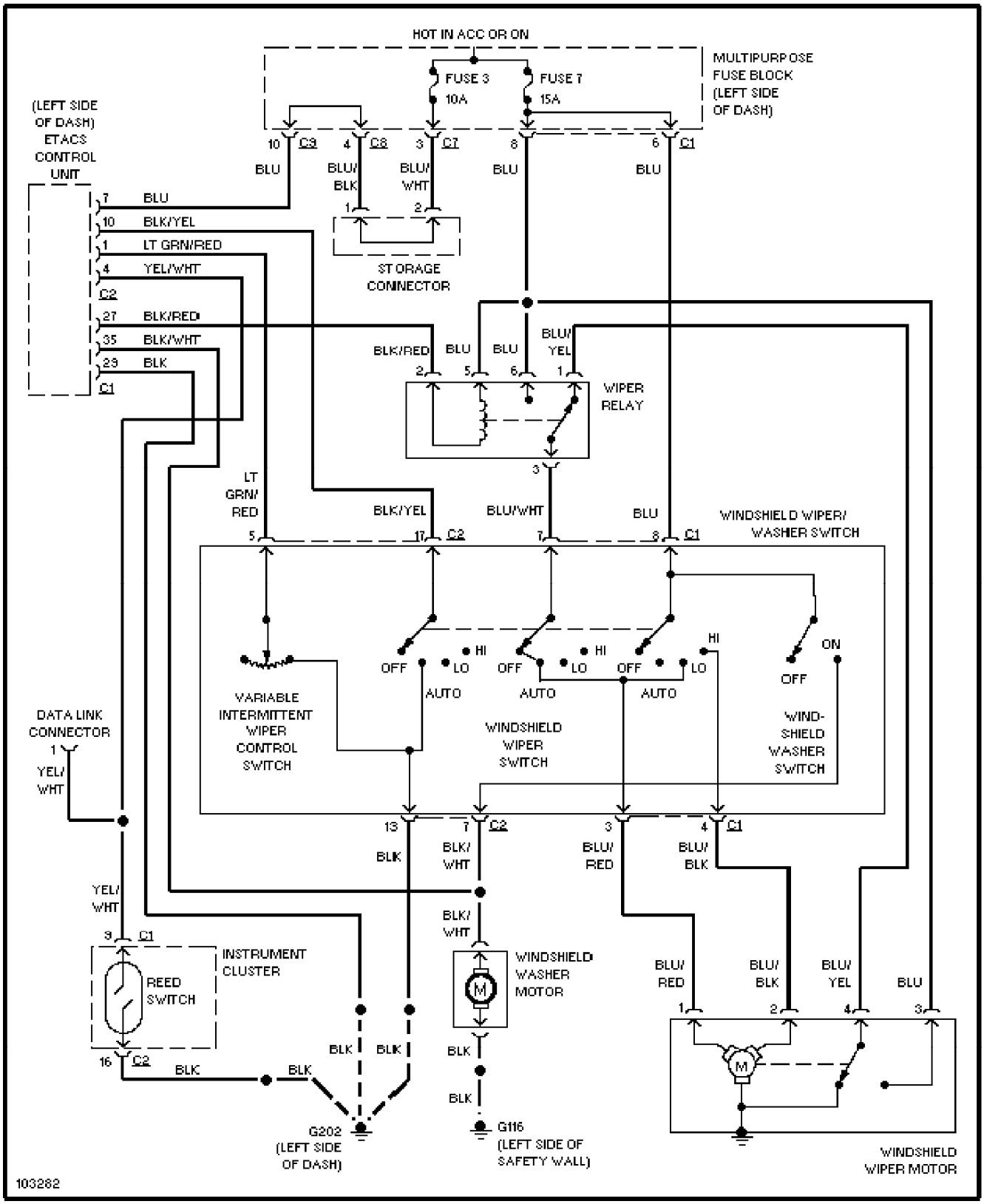

SYSTEM WIRING DIAGRAMS
Wiper/Washer Circuit, W/O ETACS UNIT (p. 21)

1991 Mitsubishi Galant

For x

Copyright © 1998 Mitchell Repair Information Company, LLC

Wednesday, September 29, 2004 12:00PM

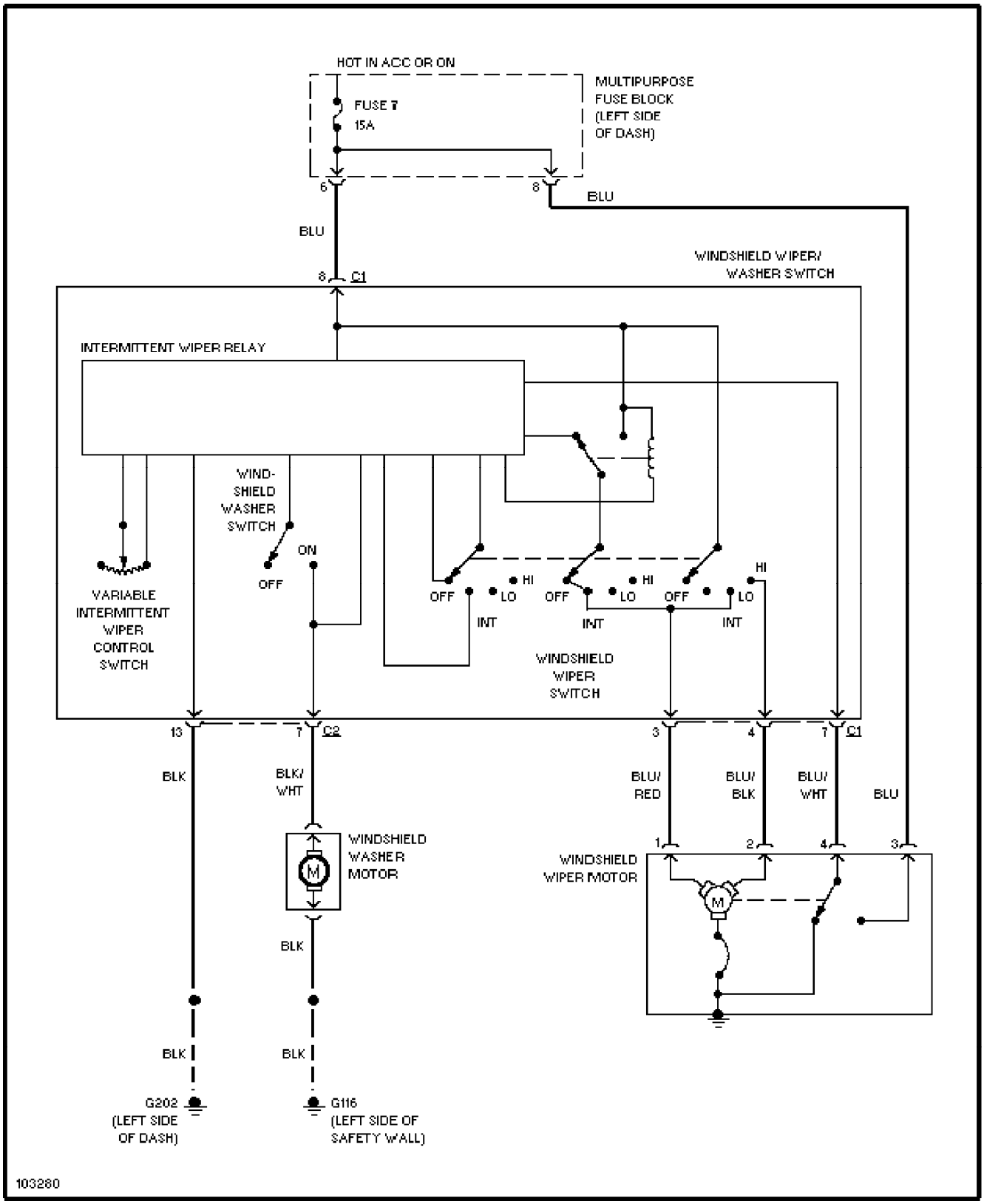

WIRING DIAGRAMS
Fig. 1: Engine Compartment & Headlights (Grid 1-3)
1991 Mitsubishi Galant
For x
Copyright © 1998 Mitchell Repair Information Company, LLC
Wednesday, September 29, 2004 12:01PM

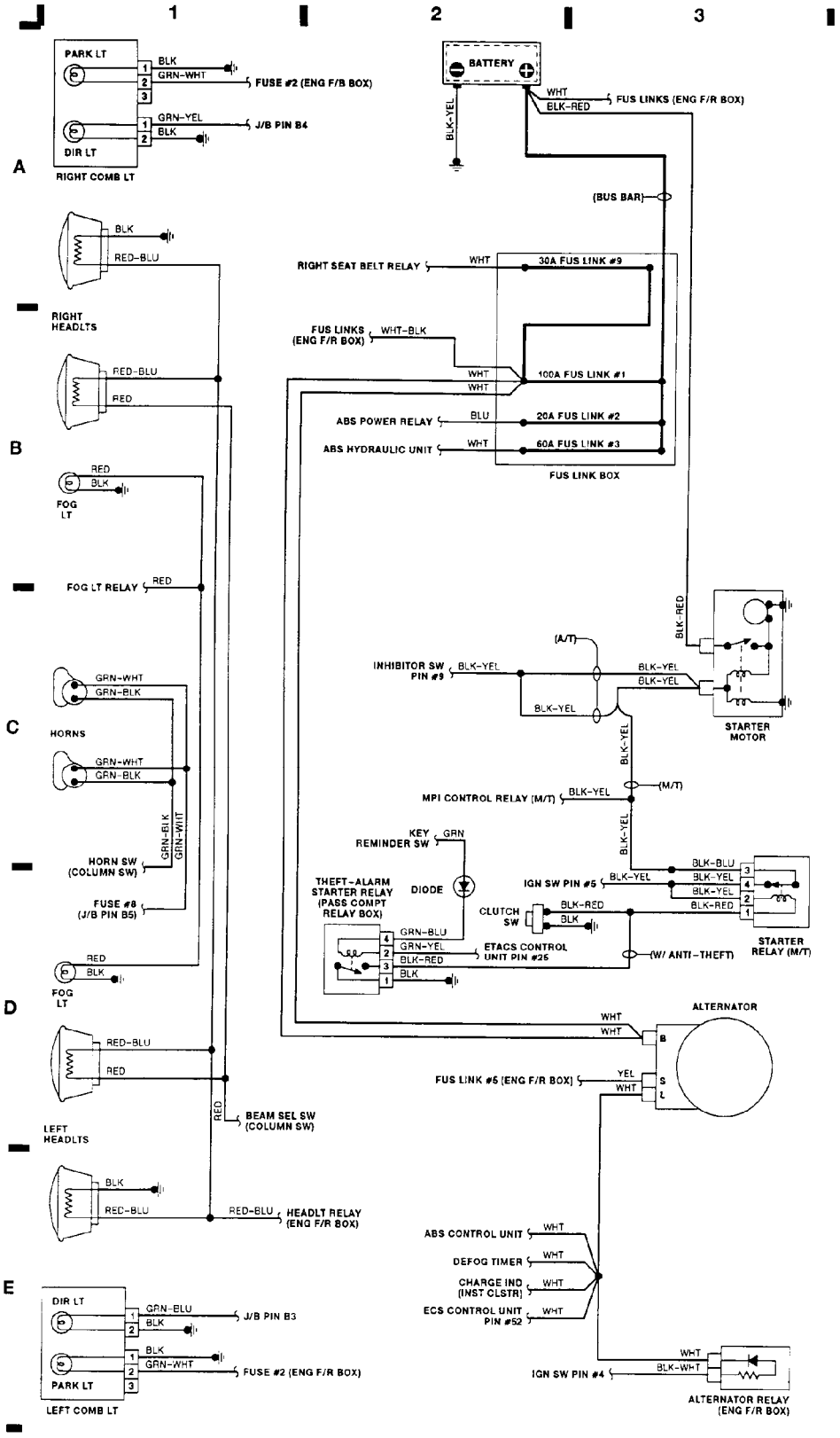

WIRING DIAGRAMS
Fig. 2: Computer Engine Control (2.0L SOHC) (Grid 4-7) (p. 2)
1991 Mitsubishi Galant
For x
Copyright © 1998 Mitchell Repair Information Company, LLC
Wednesday, September 29, 2004 12:01PM

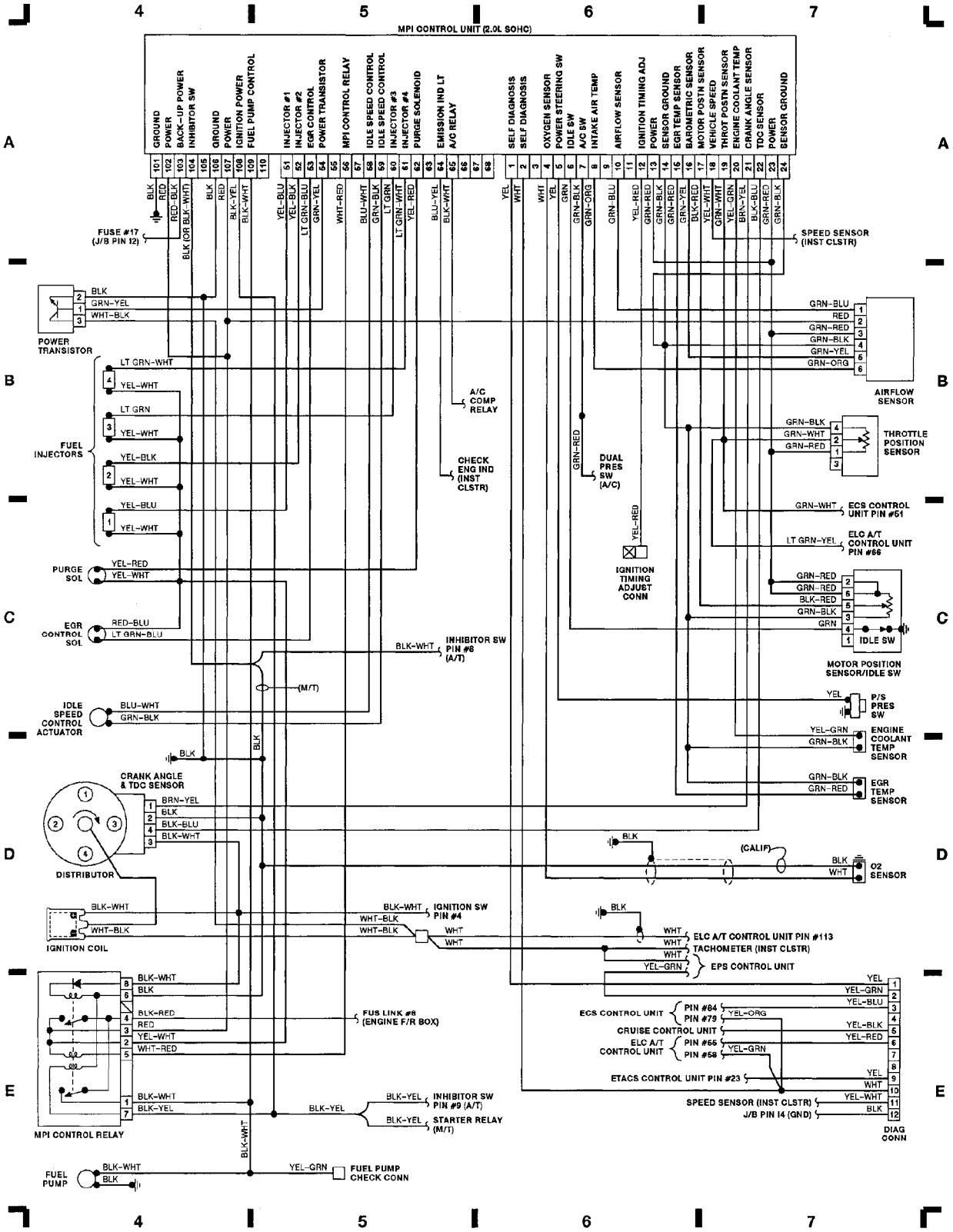

WIRING DIAGRAMS

Fig. 3: Computer Engine Control (2.0L DOHC) (Grid 8-11) (p. 3)

1991 Mitsubishi Galant

For x

Copyright © 1998 Mitchell Repair Information Company, LLC

Wednesday, September 29, 2004 12:01PM

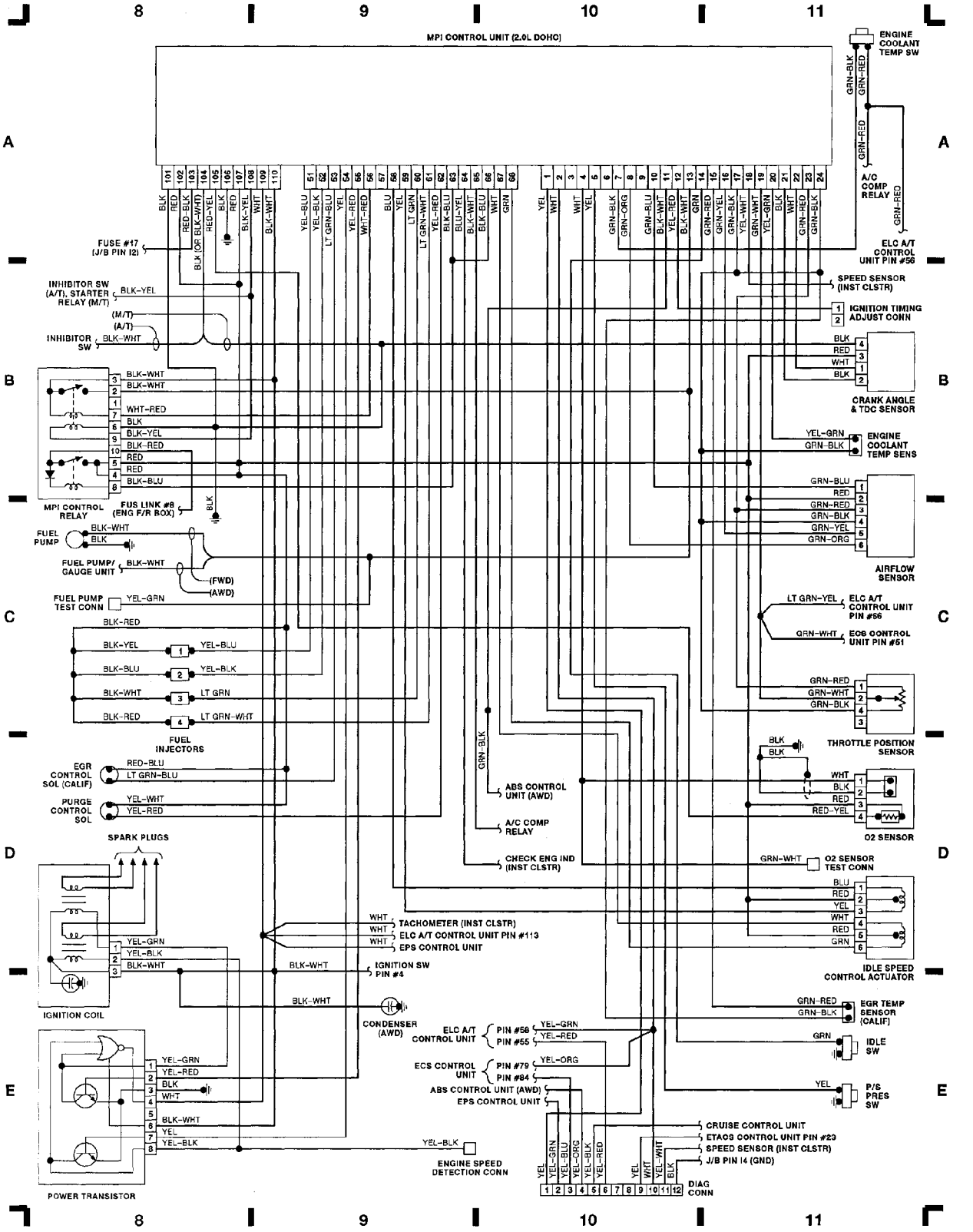

92H11632

WIRING DIAGRAMS

Fig. 4: Computer Engine Control (2.0L TURBO) (Grid 12-15) (p. 4)

1991 Mitsubishi Galant

For x

Copyright © 1998 Mitchell Repair Information Company, LLC

Wednesday, September 29, 2004 12:01PM

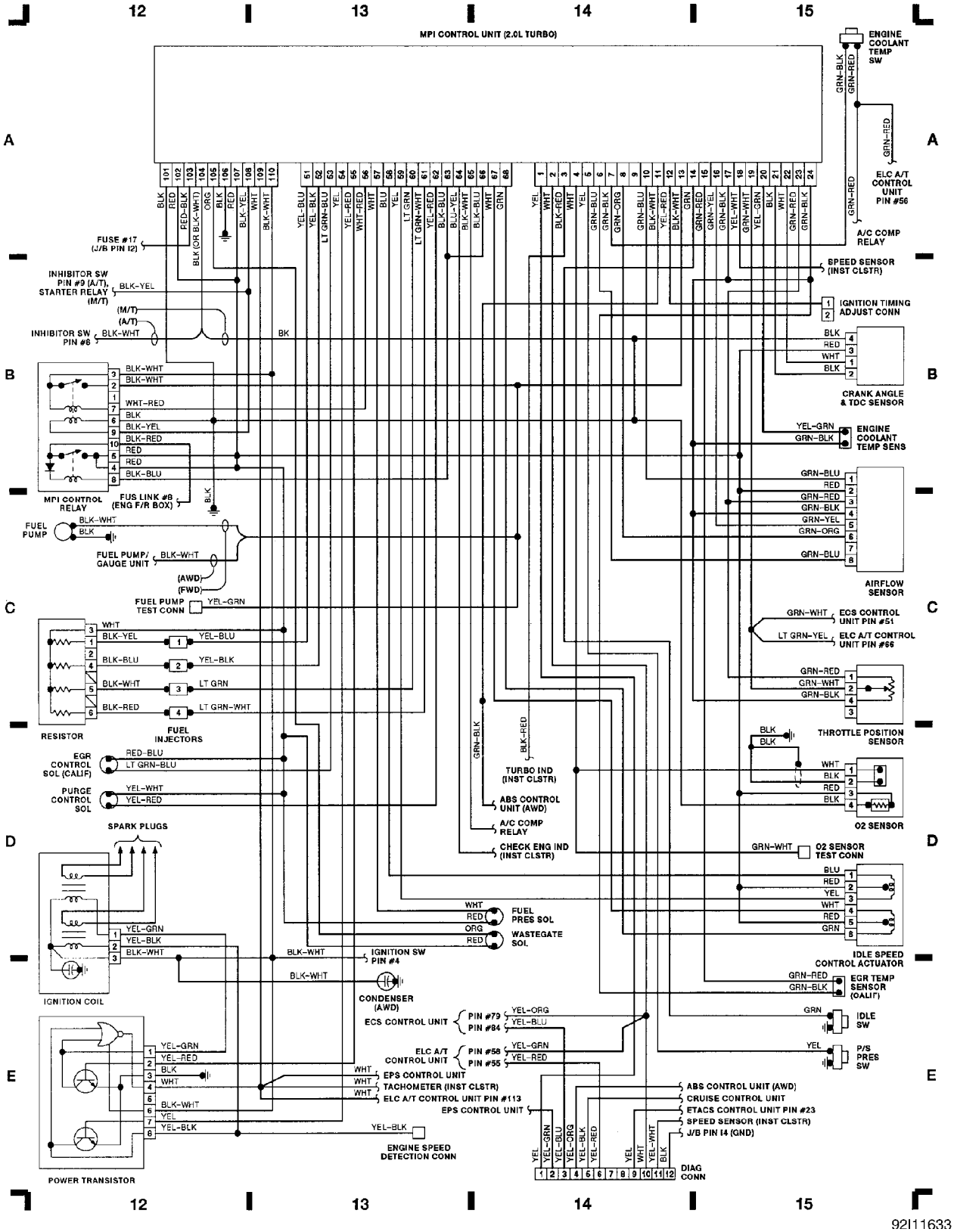

WIRING DIAGRAMS

Fig. 5: Fuse Link Box, Rad Fan Motor, Fog Lights (Grid 16-19) (p. 5)

1991 Mitsubishi Galant

For x

Copyright © 1998 Mitchell Repair Information Company, LLC

Wednesday, September 29, 2004 12:01PM

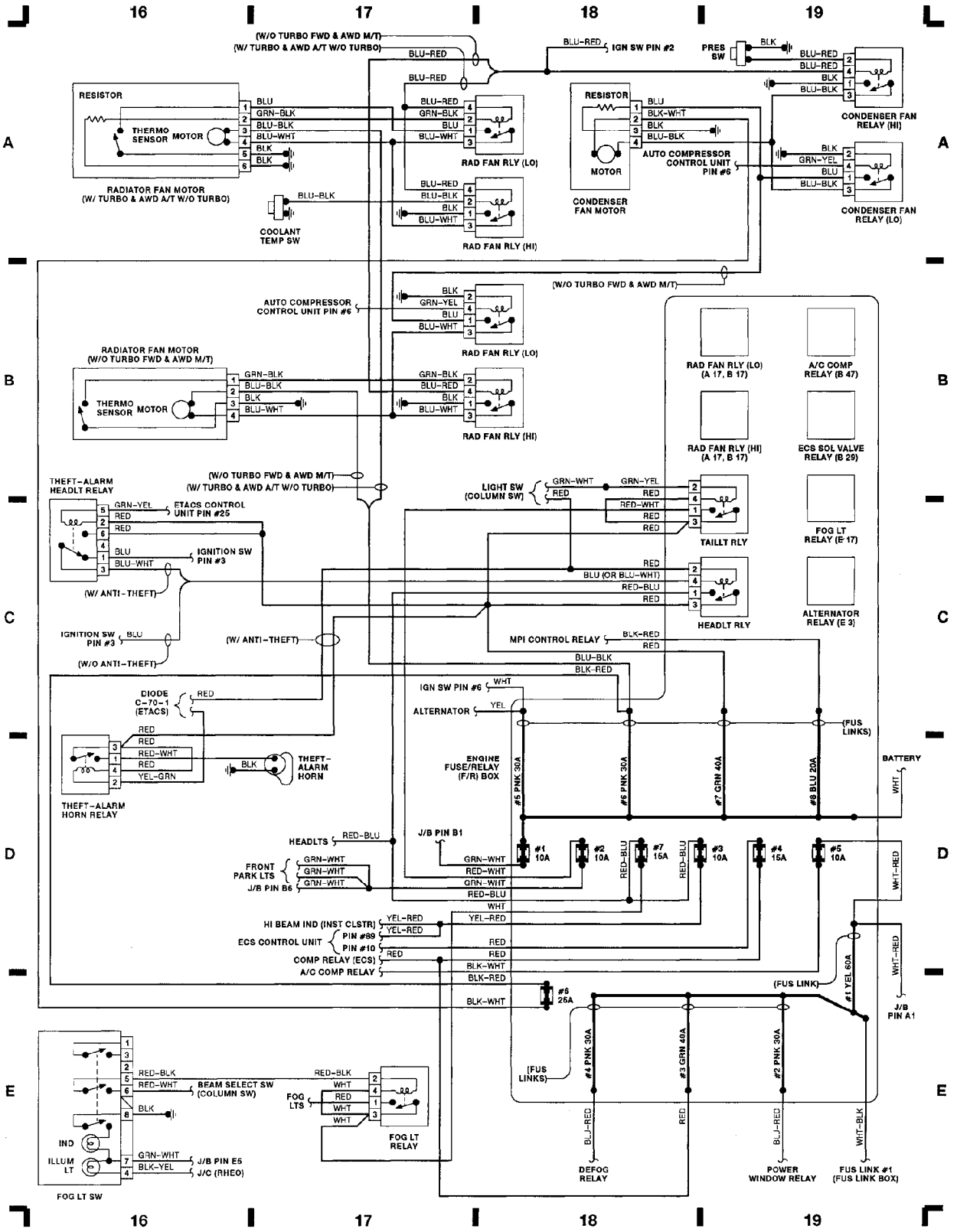

WIRING DIAGRAMS

Fig. 6: Junction Block (Partial), Ignition Switch (Grid 20-23) (p. 6)

1991 Mitsubishi Galant

For x

Copyright © 1998 Mitchell Repair Information Company, LLC

Wednesday, September 29, 2004 12:01PM

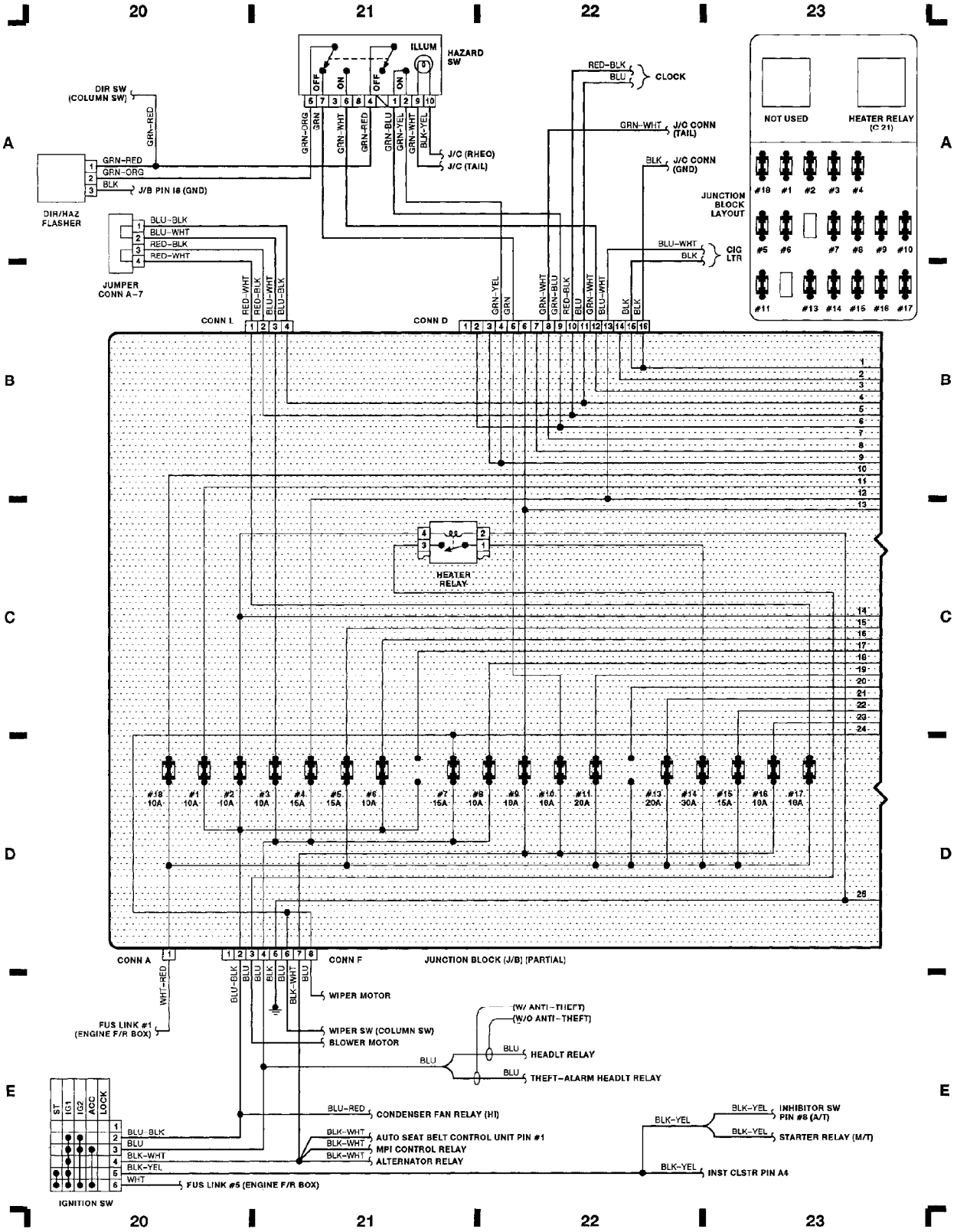

92A11635

WIRING DIAGRAMS
Fig. 7: Junction Block (Partial) (Grid 24-27) (p. 7)
1991 Mitsubishi Galant
For x
Copyright © 1998 Mitchell Repair Information Company, LLC
Wednesday, September 29, 2004 12:01PM

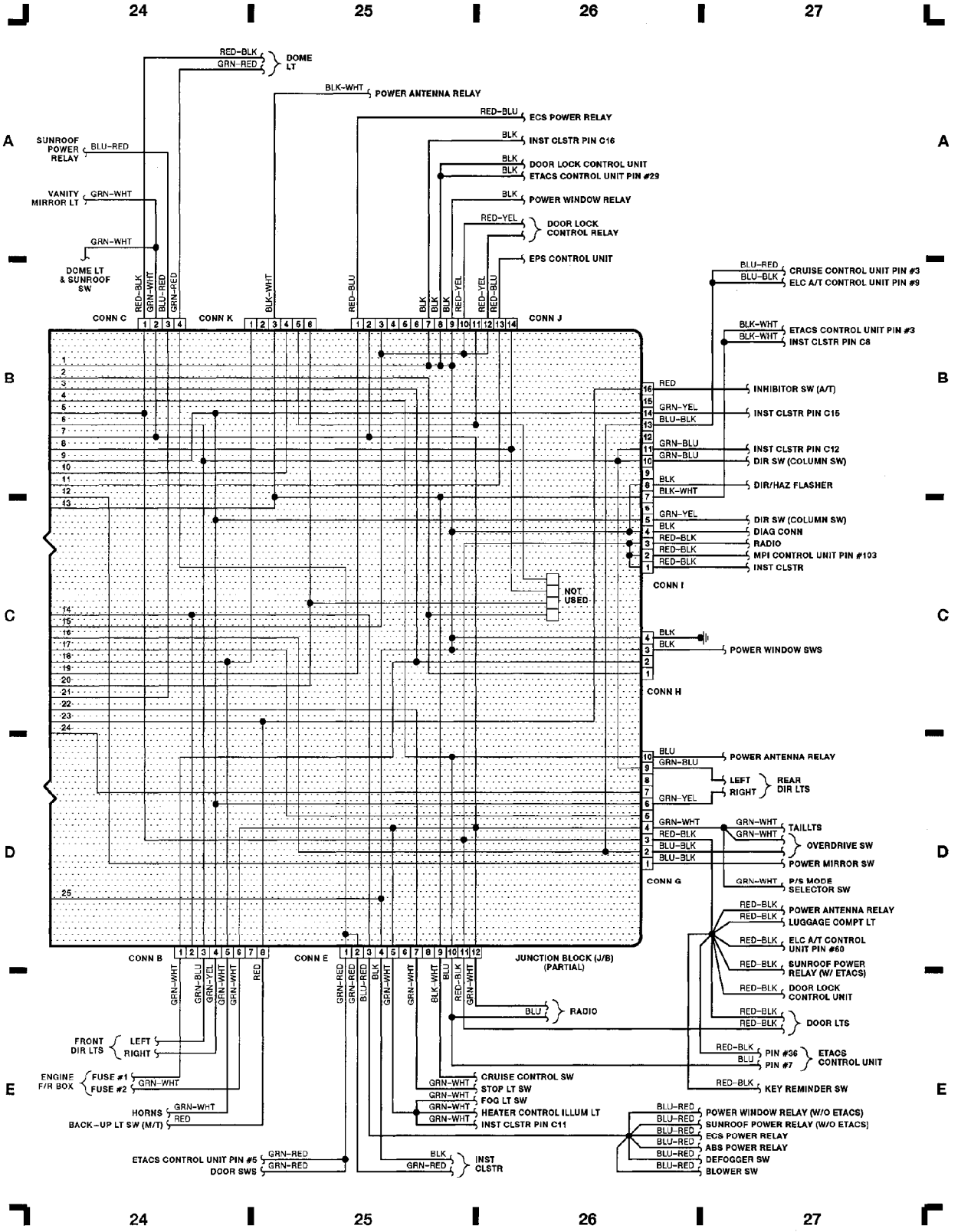

WIRING DIAGRAMS

Fig. 8: ECS Ctrl Unit, ECS Indicators, ECS Sol Valve (Grid 28-31) (p. 8)

1991 Mitsubishi Galant

For x

Copyright © 1998 Mitchell Repair Information Company, LLC

Wednesday, September 29, 2004 12:01PM

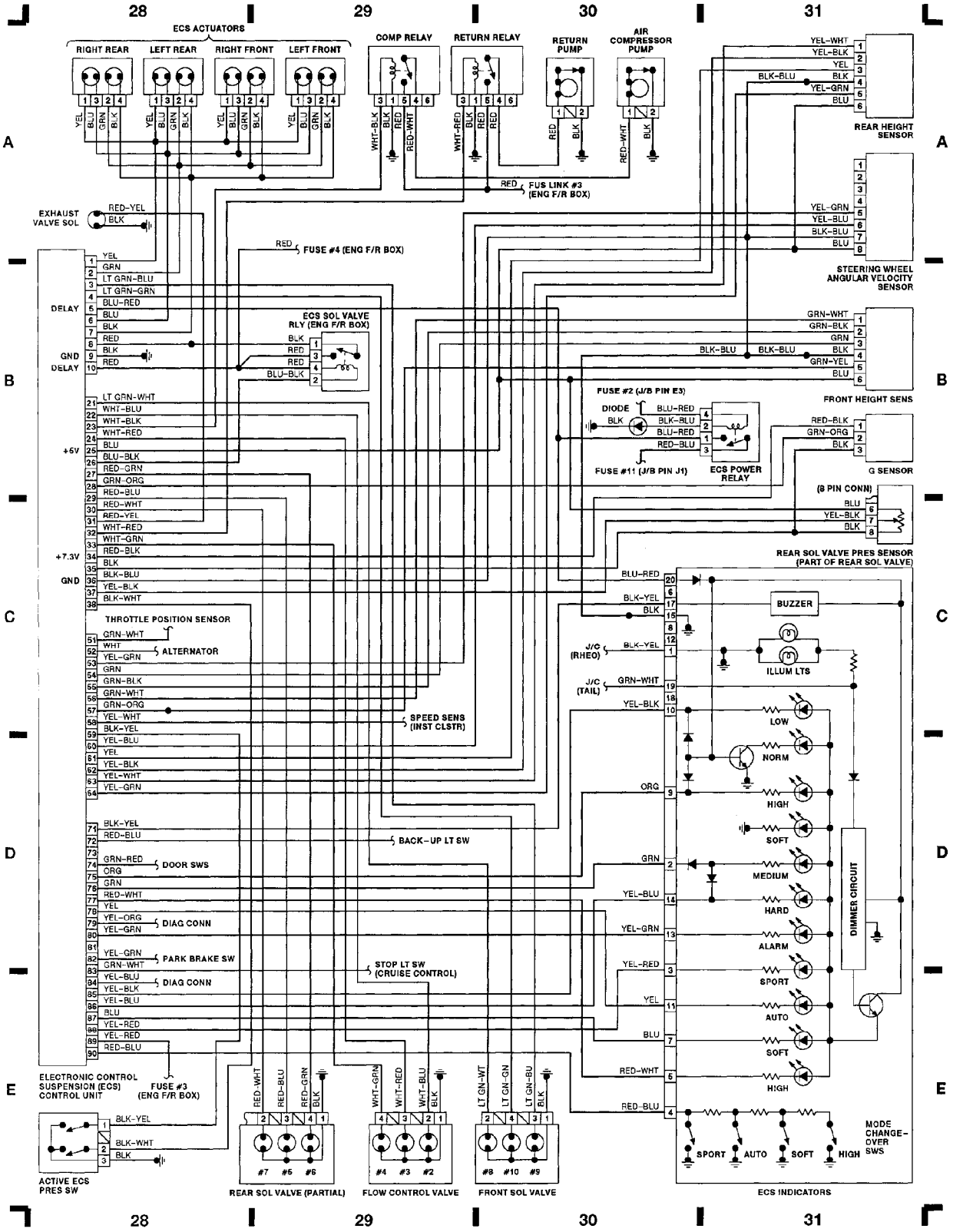

WIRING DIAGRAMS

Fig. 9: ABS Control (FWD & AWD), ABS Hydraulic Units (Grid 32-35) (p. 9)

1991 Mitsubishi Galant

For x

Copyright © 1998 Mitchell Repair Information Company, LLC

Wednesday, September 29, 2004 12:01PM

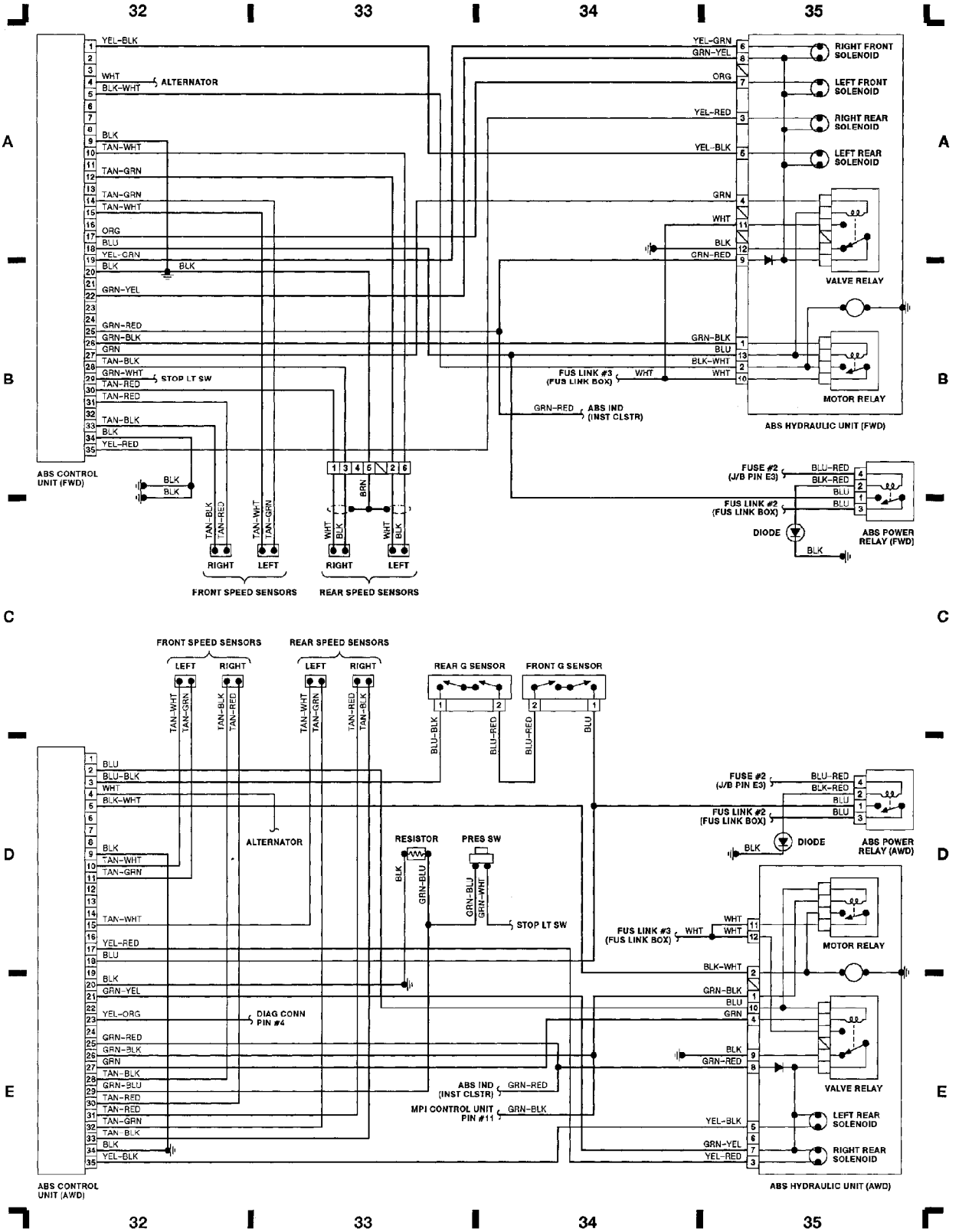

92D11638

WIRING DIAGRAMS

Fig. 10: Seat Belts, Sunroof, Dome Light, Heater (Grid 36-39) (p. 10)

1991 Mitsubishi Galant

For x

Copyright © 1998 Mitchell Repair Information Company, LLC

Wednesday, September 29, 2004 12:01PM

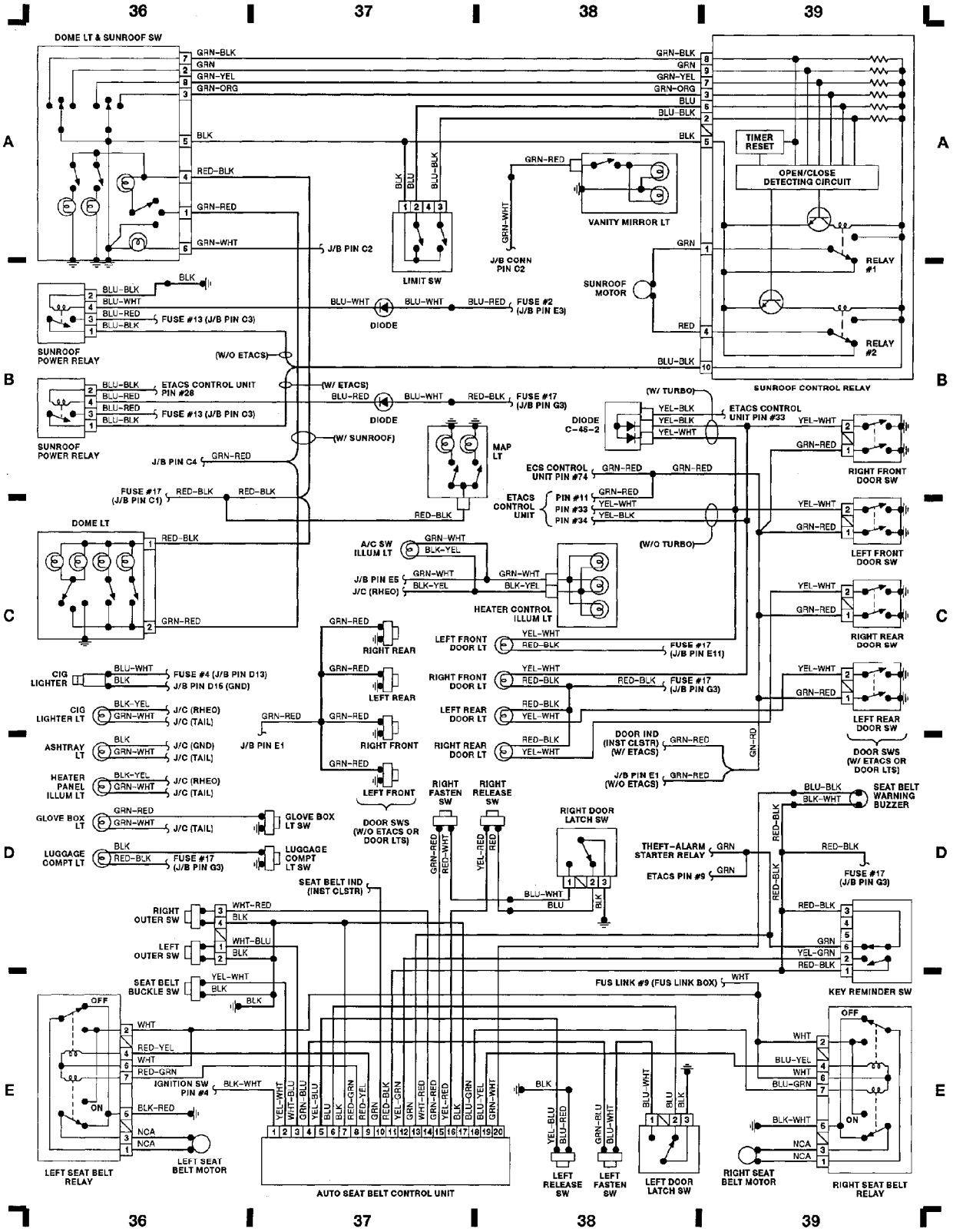

92E11639

WIRING DIAGRAMS

Fig. 11: ELC A/T Ctrl (4 Speed), Cruise Ctrl, (Grid 40-43) (p. 11)

1991 Mitsubishi Galant

For x

Copyright © 1998 Mitchell Repair Information Company, LLC

Wednesday, September 29, 2004 12:01PM

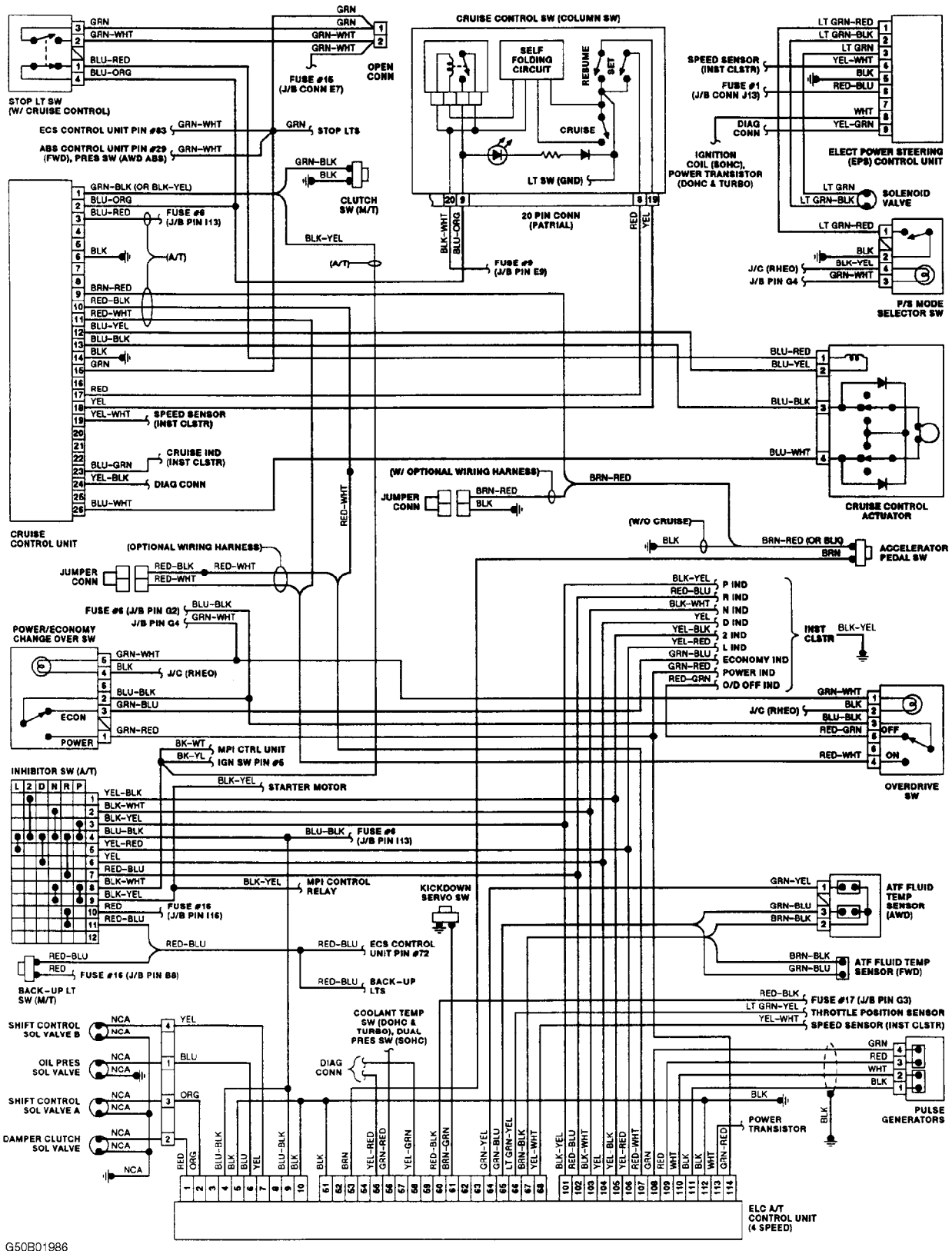

WIRING DIAGRAMS

Fig. 12: ETACS Ctrl Unit, Column Sw, A/C (Grid 44-47) (p. 12)

1991 Mitsubishi Galant

For x

Copyright © 1998 Mitchell Repair Information Company, LLC

Wednesday, September 29, 2004 12:01PM

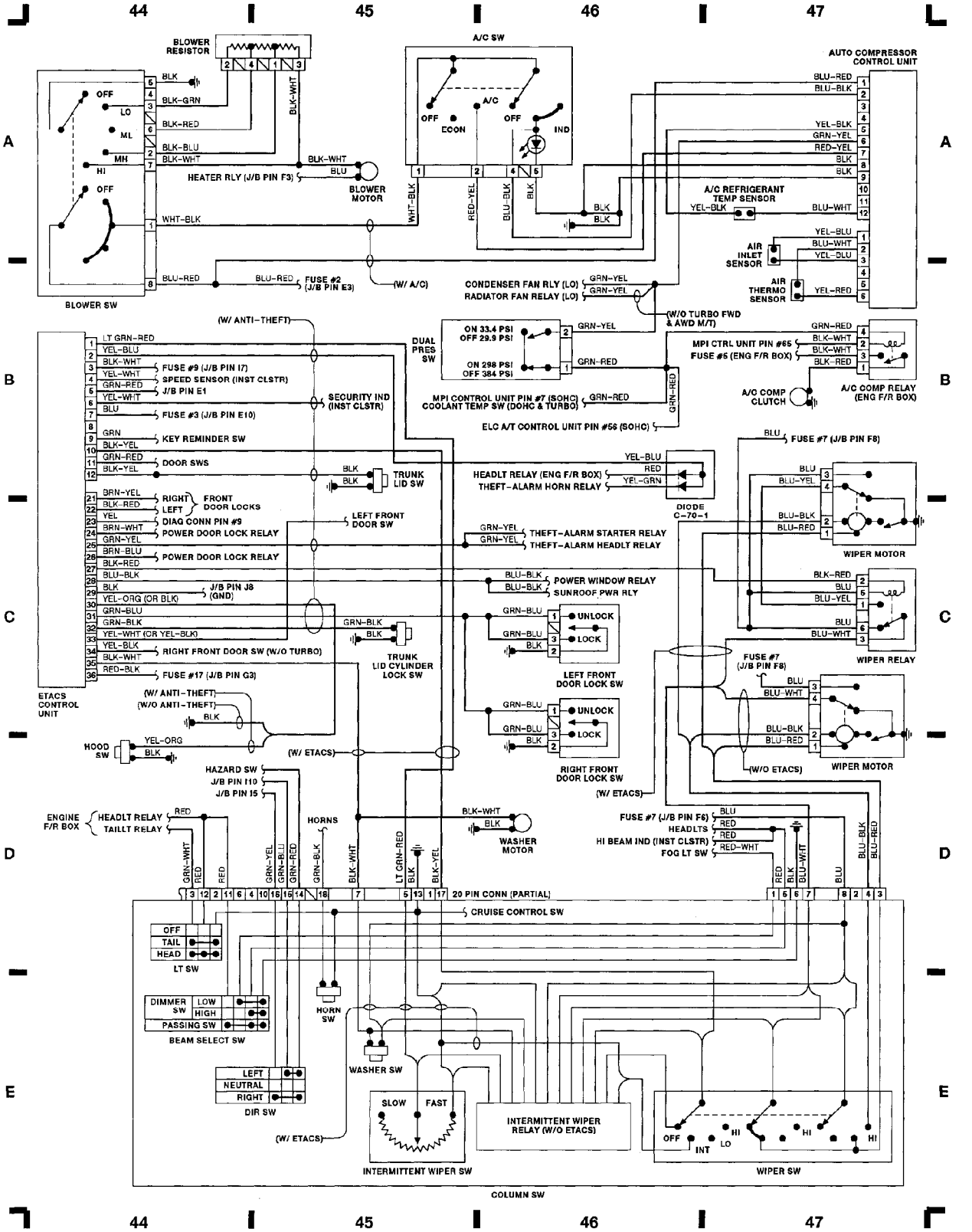

WIRING DIAGRAMS

Fig. 13: Inst Cluster, Rheostat, Defog Relay (Grid 48-51) (p. 13)

1991 Mitsubishi Galant

For x

Copyright © 1998 Mitchell Repair Information Company, LLC

Wednesday, September 29, 2004 12:01PM

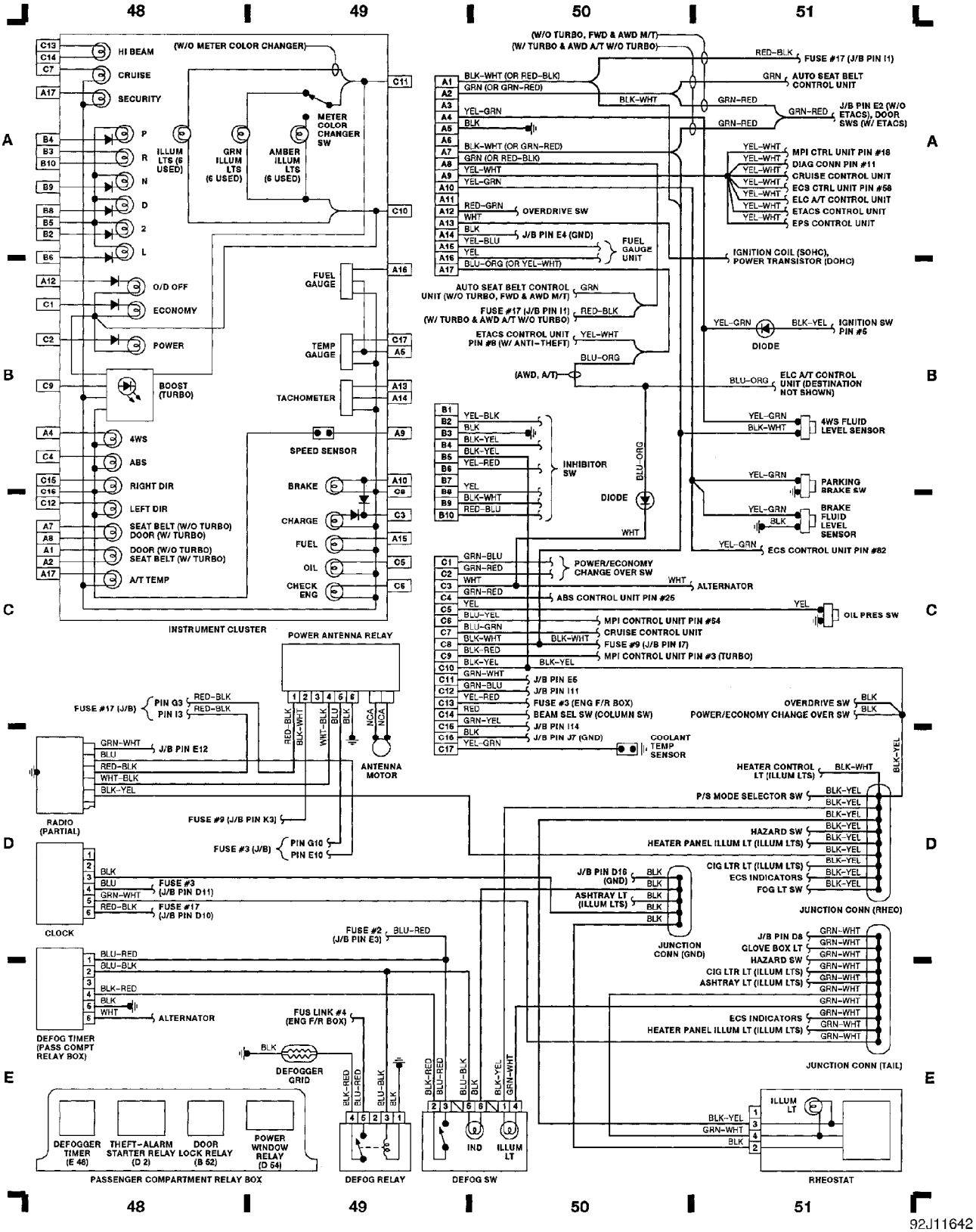

WIRING DIAGRAMS
Fig. 14: Power Door/Window/Mir, Taillights (Grid 52-55) (p. 14)
1991 Mitsubishi Galant
For x
Copyright © 1998 Mitchell Repair Information Company, LLC
Wednesday, September 29, 2004 12:01PM

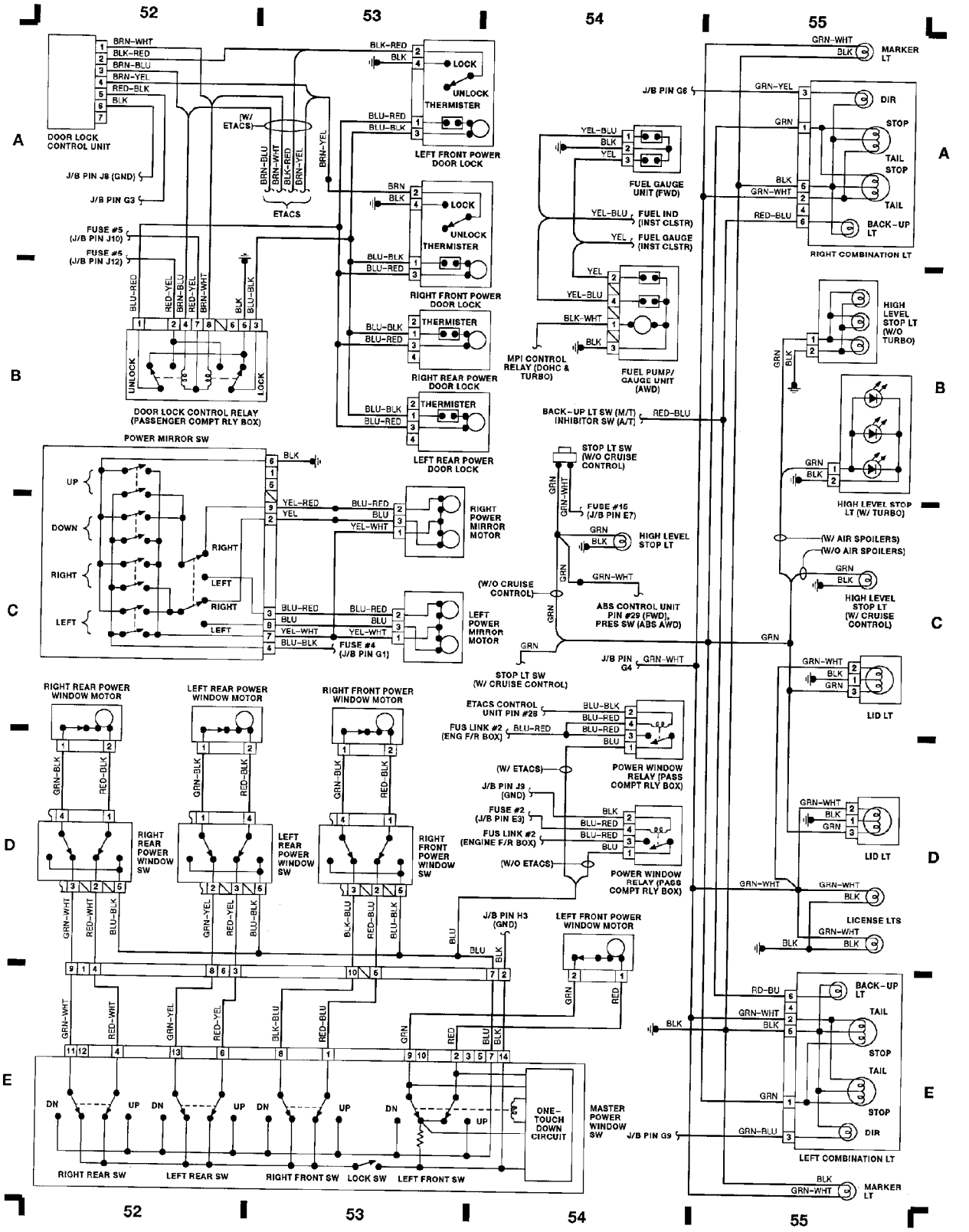
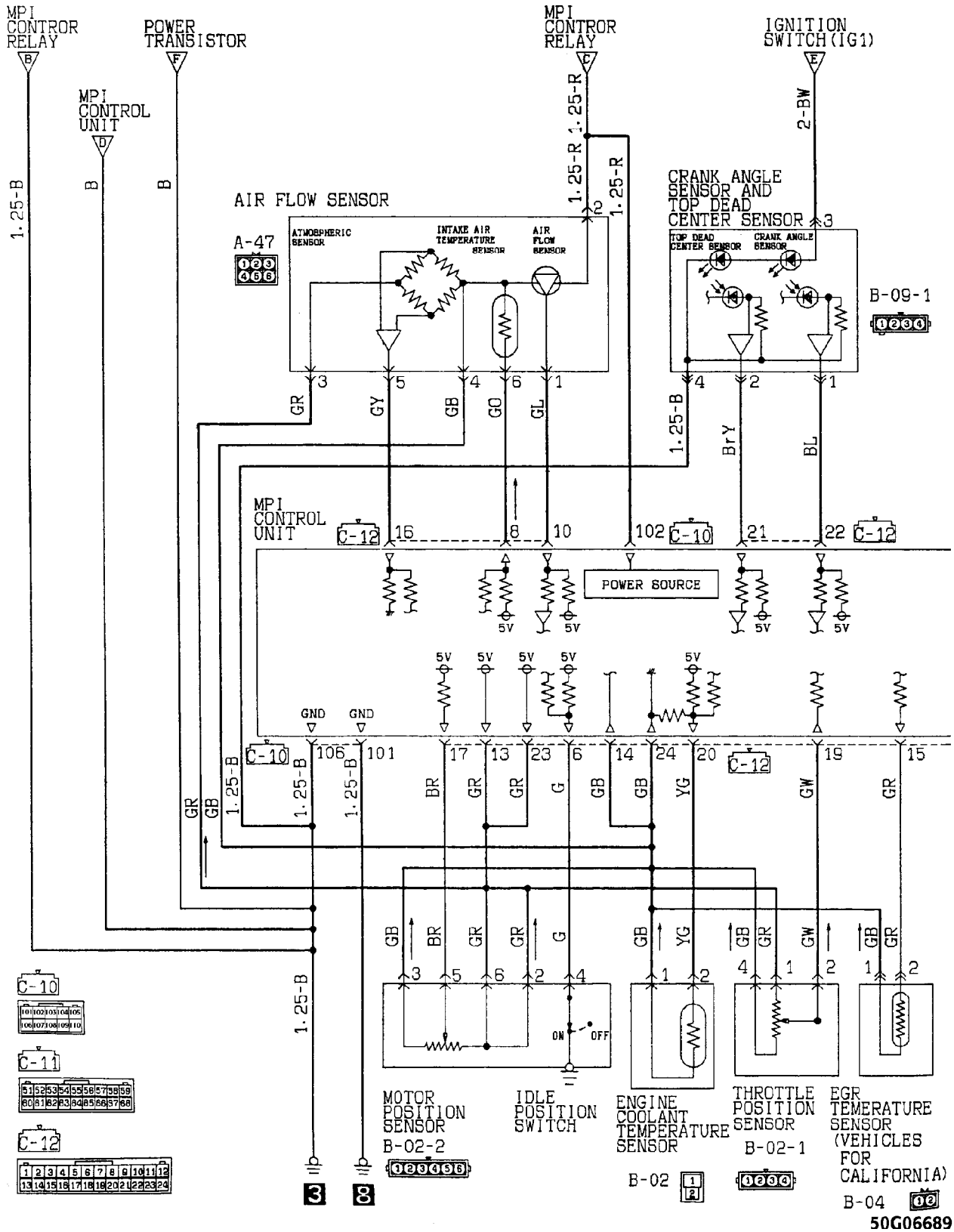
WIRING DIAGRAMS
Fig. 15: Motor Position Sensor & Idle Sw. Ckt (p. 15)
1991 Mitsubishi Galant
For x
Copyright © 1998 Mitchell Repair Information Company, LLC
Wednesday, September 29, 2004 12:01PM